PRAMET

车削 / TURNING

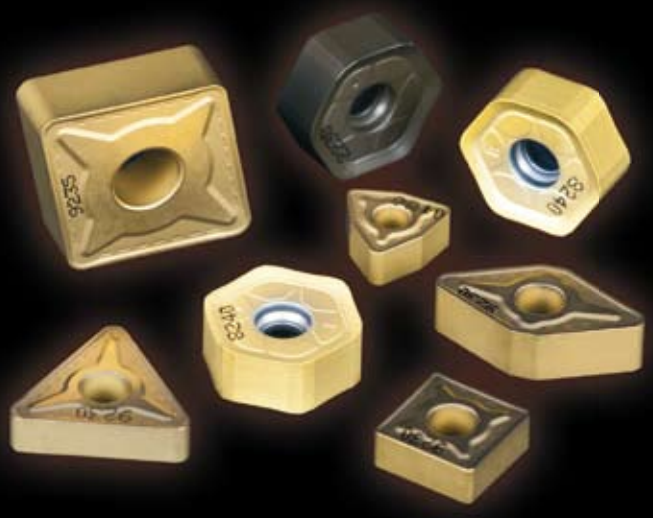

2011.1

耗 / NEWS

刀片 / Inserts	
CNMG	4
DNMG	6
SNMG	8
SNMM	10
TNMG	12
WNMG	14

技术 部分
TECHNICAL PART

技术 部分 / Technical part	
刀片类型 / Geometry of cutting inserts	18

CNMG

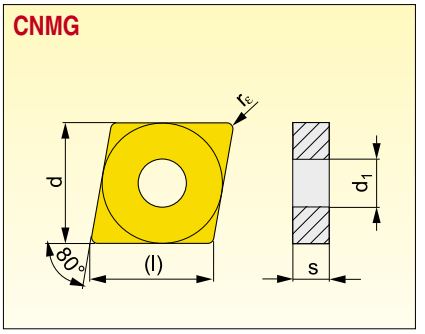

规格 Size	(l)	d	d1	s	
0903	9,7	9,525	3,81	3,18	
1204	12,9	12,700	5,16	4,76	
1606	16,1	15,875	6,35	6,35	
1906	19,3	19,050	7,94	6,35	
2509	25,8	25,400	9,12	9,52	

断屑槽 Chip breaker	ISO	ANSI	材质等级 / Grades									半径 Radius	每转进给量 Feed per rev.		半径 Radius	
			6605	6615	6630	6640	9210	9230	9235	8016	8030	r_ε	f_{min}	f_{max}	$a_{p\,min}$	$a_{p\,max}$
	CNMG 120404E-F	CNMG 431E-F	●	●	●			●		●	●	0,4	0,08	0,30	0,5	3,0
	CNMG 120408E-F	CNMG 432E-F		●	●			●		●	●	0,8	0,08	0,35	0,8	3,0
	CNMG 120404E-FF	CNMG 431E-FF								●		0,4	0,06	0,15	0,4	1,5
	CNMG 120408E-FF	CNMG 432E-FF								●		0,8	0,08	0,20	0,8	1,5
	CNMG 090304E-FM	CNMG 321E-FM					●	●			●	0,4	0,10	0,30	0,5	6,3
	CNMG 090308E-FM	CNMG 322E-FM					●	●			●	0,8	0,10	0,45	0,8	3,0
	CNMG 120404E-FM	CNMG 431E-FM					●	●			●	0,4	0,10	0,30	0,5	3,0
	CNMG 120408E-FM	CNMG 432E-FM					●	●			●	0,8	0,15	0,45	0,8	3,0
	CNMG 120412E-FM	CNMG 433E-FM					●	●				1,2	0,15	0,45	1,2	4,0
	CNMG 090308E-M	CNMG 322E-M					●	●	●			0,8	0,15	0,60	0,8	4,0
	CNMG 120404E-M	CNMG 431E-M		●	●		●	●				0,4	0,17	0,60	0,8	6,0
	CNMG 120408E-M	CNMG 432E-M	●	●	●	●	●	●	●	●		0,8	0,17	0,60	0,8	6,0
	CNMG 120412E-M	CNMG 433E-M	●	●	●		●	●	●			1,2	0,17	0,60	1,2	6,0
	CNMG 120416E-M	CNMG 434E-M	○	○			●	●	●			1,6	0,17	0,80	1,6	6,0
	CNMG 160608E-M	CNMG 542E-M			●		●	●	●			0,8	0,17	0,60	0,8	7,0
	CNMG 160612E-M	CNMG 543E-M			●		●	●	●			1,2	0,17	0,60	1,2	7,0
	CNMG 160616E-M	CNMG 544E-M						●	●			1,6	0,17	0,60	1,6	7,0
	CNMG 190608E-M	CNMG 642E-M			●	●	●	●	●			0,8	0,15	0,60	0,8	6,0
	CNMG 190612E-M	CNMG 643E-M		○	●	●	●	●	●			1,2	0,17	0,80	1,2	8,0
	CNMG 190616E-M	CNMG 644E-M			●		●	●	●			1,6	0,17	0,80	1,6	8,0

● 标准库存产品 / Stock Assort.
● 标准库存产品 / New Stock Assort.
○ 非标准库存产品 / Non-stock Assort.
○ 非标准库存产品 / New Non-stock Assort.

所有尺寸 / All dimensions [mm]

PRAMET

断屑槽 Chip breaker	ISO	ANSI	材质等级 / Grades 6605	6615	6630	6640	9210	9230	9235	8016	8030		半径 Radius r_ε	每转进给量 Feed per rev. f_{min}	f_{max}	半径 Radius $a_{p\,min}$	$a_{p\,max}$
	CNMG 120408E-R	CNMG 432E-R	●	●	●	●	●	●	●				0,8	0,17	0,60	1,0	8,0
	CNMG 120412E-R	CNMG 433E-R	●	●	●	○	●	●	●	○			1,2	0,25	0,70	2,0	6,0
	CNMG 120416E-R	CNMG 434E-R	○	●		○	●	●	●				1,6	0,30	0,80	2,0	6,0
	CNMG 160608E-R	CNMG 542E-R	○	●	○	○	●	●	●				0,8	0,25	0,60	3,0	7,0
	CNMG 160612E-R	CNMG 543E-R	○	●	●	○	●	●	●				1,2	0,25	0,70	3,0	7,0
	CNMG 160616E-R	CNMG 544E-R	○	●			●	●	●				1,6	0,25	0,70	3,0	7,0
	CNMG 190608E-R	CNMG 642E-R	●	●	○	○	●	●	●				0,8	0,25	0,60	3,0	8,0
	CNMG 190612E-R	CNMG 643E-R	●	●	●	●	●	●	●				1,2	0,25	0,70	3,0	8,0
	CNMG 190616E-R	CNMG 644E-R	●	●	●	●	●	●	●				1,6	0,25	0,70	2,0	9,0
	CNMG 120408E-RM	CNMG 432E-RM				●	●	●	●				0,8	0,20	0,50	1,0	7,0
	CNMG 120412E-RM	CNMG 433E-RM				●	●	●	●				1,2	0,25	0,70	1,5	7,0
	CNMG 120416E-RM	CNMG 434E-RM					●	●	●				1,6	0,30	0,75	2,0	7,0
	CNMG 160608E-RM	CNMG 542E-RM					●	●	●				0,8	0,20	0,50	1,0	8,0
	CNMG 160612E-RM	CNMG 543E-RM				●	●	●	●				1,2	0,25	0,70	1,5	8,0
	CNMG 160616E-RM	CNMG 544E-RM					●	●	●				1,6	0,30	0,80	2,0	8,0
	CNMG 190608E-RM	CNMG 642E-RM					●	●	●				0,8	0,20	0,50	1,0	10,0
	CNMG 190612E-RM	CNMG 643E-RM				●	●	●	●				1,2	0,25	0,70	1,5	10,0
	CNMG 190616E-RM	CNMG 644E-RM				●	●	●	●				1,6	0,30	0,80	2,0	10,0
	CNMG 250924E-RM	CNMG 866E-RM					●	●	●				2,4	0,40	1,00	2,5	15,0
	CNMG 120408E-DM	CNMG 432E-DM			●			●					0,8	0,15	0,60	1,0	7,0
	CNMG 160608E-DM	CNMG 542E-DM						●					0,8	0,15	0,60	1,0	7,0
	CNMG 120408W-F	CNMG 432W-F		●			●	●					0,8	0,10	0,60	0,2	4,4
	CNMG 120408W-M	CNMG 432W-M		●	●		●	●					0,8	0,15	0,60	0,8	4,0
	CNMG 120412W-M	CNMG 433W-M		●			●	●					1,2	0,20	0,90	1,2	4,0
	CNMG 120404E-NM	CNMG 431E-NM						●	●		●		0,4	0,15	0,30	0,5	3,0
	CNMG 120408E-NM	CNMG 432E-NM						●	●		●		0,8	0,20	0,40	0,8	3,0
	CNMG 120412E-NM	CNMG 433E-NM						●	●				1,2	0,20	0,40	1,2	3,5
	CNMG 160608E-NM	CNMG 542E-NM						●	●				0,8	0,25	0,50	0,8	5,0
	CNMG 160612E-NM	CNMG 543E-NM						●	●				1,2	0,25	0,50	1,2	5,0
	CNMG 190612E-NM	CNMG 643E-NM						●	●				1,2	0,30	0,50	1,2	8,0
	CNMG 120404ER-SI	CNMG 431ER-SI			○			●			●		0,4	0,20	0,30	0,8	5,0
	CNMG 120408ER-SI	CNMG 432ER-SI			○			●			●		0,8	0,20	0,50	0,8	5,0
	CNMG 120404EL-SI	CNMG 431EL-SI			○			●			●		0,4	0,20	0,30	0,8	5,0
	CNMG 120408EL-SI	CNMG 432EL-SI			○			●			●		0,8	0,20	0,50	0,8	5,0

所有尺寸 / All dimensions [mm]

● 标准库存产品 / Stock Assort.
● 标准库存产品 / New Stock Assort.
○ 非标准库存产品 / Non-stock Assort.
○ 非标准库存产品 / New Non-stock Assort.

DNMG

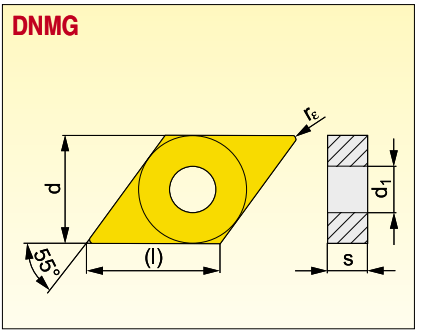

规格 Size	(l)	d	d_1	s	
1104	11,6	9,525	3,81	4,76	
1504	15,5	12,700	5,16	4,76	
1506	15,5	12,700	5,16	6,35	

Nástroje viz str. / Nástroje viď str.: 18, 33-35, 50, 78

断屑槽 Chip breaker	ISO	ANSI	材质等级 / Grades									半径 Radius	每转进给量 Feed per rev.		半径 Radius	
			6605	6615	6630	6640	9210	9230	9235	8016	8030	r_ε	f_{min}	f_{max}	$a_{p\,min}$	$a_{p\,max}$
	DNMG 150608E-DM	DNMG 442E-DM			○			●				0,8	0,15	0,48	1,0	4,5
	DNMG 110404E-F	DNMG 331E-F		●				●			●	0,4	0,08	0,24	0,5	3,0
	DNMG 110408E-F	DNMG 332E-F		●				●				0,8	0,15	0,35	0,8	3,0
	DNMG 150404E-F	DNMG 431E-F			○			●		●	●	0,4	0,08	0,24	0,5	3,0
	DNMG 150408E-F	DNMG 432E-F						●				0,8	0,08	0,35	0,8	3,0
	DNMG 150604E-F	DNMG 441E-F	○	●	●			●		●	●	0,4	0,08	0,24	0,5	3,0
	DNMG 150608E-F	DNMG 442E-F		●	○			●		●	●	0,8	0,08	0,35	0,8	3,0
	DNMG 110402E-FF	DNMG 33(0.5)E-FF								●		0,2	0,06	0,12	0,2	1,5
	DNMG 110404E-FF	DNMG 331E-FF								●		0,4	0,06	0,20	0,4	1,5
	DNMG 110408E-FF	DNMG 332E-FF								●		0,8	0,08	0,25	0,8	1,5
	DNMG 150404E-FF	DNMG 431E-FF								●		0,4	0,06	0,20	0,4	1,5
	DNMG 150604E-FF	DNMG 441E-FF								●		0,4	0,06	0,20	0,4	1,5
	DNMG 150608E-FF	DNMG 442E-FF								●		0,8	0,08	0,25	0,8	1,5
	DNMG 110404E-FM	DNMG 331E-FM					●	●			●	0,4	0,10	0,24	0,4	3,0
	DNMG 110408E-FM	DNMG 332E-FM					●	●			●	0,8	0,10	0,35	0,8	3,0
	DNMG 150404E-FM	DNMG 431E-FM					●	●			●	0,4	0,10	0,24	0,5	3,0
	DNMG 150408E-FM	DNMG 432E-FM					●	●			●	0,8	0,15	0,45	0,8	3,0
	DNMG 150604E-FM	DNMG 441E-FM					●	●			●	0,4	0,10	0,24	0,5	3,0
	DNMG 150608E-FM	DNMG 442E-FM					●	●			●	0,8	0,15	0,45	0,8	3,0
	DNMG 150612E-FM	DNMG 443E-FM					●	●			●	1,2	0,15	0,45	1,2	3,0

● 标准库存产品 / Stock Assort.
● 标准库存产品 / New Stock Assort.
○ 非标准库存产品 / Non-stock Assort.
○ 非标准库存产品 / New Non-stock Assort.

所有尺寸 / All dimensions [mm]

PRAMET

断屑槽 Chip breaker	ISO	ANSI	材质等级 / Grades									半径 Radius	每转进给量 Feed per rev.		半径 Radius	
			6605	6615	6630	6640	9210	9230	9235	8016	8030	r_ε	f_{min}	f_{max}	$a_{p\,min}$	$a_{p\,max}$
	DNMG 110404E-M	DNMG 331E-M		●	○	●	●	●				0,4	0,12	0,24	0,5	3,0
	DNMG 110408E-M	DNMG 431E-M		●	○	●	●	●	●			0,8	0,15	0,48	0,8	3,0
	DNMG 110412E-M	DNMG 432E-M			○		●	●				1,2	0,17	0,72	1,2	3,3
	DNMG 150404E-M	DNMG 433E-M		○			●	●				0,4	0,12	0,24	0,5	3,0
	DNMG 150408E-M	DNMG 332E-M		●	●	●	●	●	●			0,8	0,15	0,48	0,8	4,5
	DNMG 150412E-M	DNMG 333E-M						●				1,2	0,17	0,72	1,2	4,5
	DNMG 150604E-M	DNMG 441E-M		●			●	●				0,4	0,12	0,24	0,5	3,0
	DNMG 150608E-M	DNMG 442E-M	○	●	●	●	●	●	●			0,8	0,15	0,48	0,8	4,5
	DNMG 150612E-M	DNMG 443E-M		●	●	●	●	●	●			1,2	0,17	0,72	1,2	4,5
	DNMG 110404E-NM	DNMG 331E-NM						●	●			0,4	0,15	0,24	0,5	3,0
	DNMG 110408E-NM	DNMG 332E-NM						●	●			0,8	0,20	0,40	0,8	3,0
	DNMG 150604E-NM	DNMG 441E-NM						●	●			0,4	0,15	0,24	0,5	3,0
	DNMG 150608E-NM	DNMG 442E-NM						●	●		●	0,8	0,20	0,40	0,8	3,0
	DNMG 150612E-NM	DNMG 443E-NM						●	●			1,2	0,20	0,40	1,2	3,5
	DNMG 150608E-R	DNMG 442E-R	●	●	●	●	●	●	●			0,8	0,25	0,48	2,0	4,5
	DNMG 150612E-R	DNMG 443E-R	●	●	●	○	●	●	●			1,2	0,25	0,70	2,0	4,5
	DNMG 150616E-R	DNMG 444E-R		●			●	●				1,6	0,30	0,80	2,0	4,5
	DNMG 110408E-RM	DNMG 332E-RM					●	●	●			0,8	0,20	0,48	1,0	3,3
	DNMG 110412E-RM	DNMG 333E-RM					●	●	●			1,2	0,25	0,60	1,5	3,3
	DNMG 150412E-RM	DNMG 433E-RM					●	●	●			1,2	0,25	0,70	1,5	4,5
	DNMG 150608E-RM	DNMG 442E-RM				●	●	●	●			0,8	0,20	0,48	1,0	4,5
	DNMG 150612E-RM	DNMG 443E-RM				●	●	●	●			1,2	0,25	0,70	1,5	4,5
	DNMG 150616E-RM	DNMG 444E-RM					●	●	●			1,6	0,30	0,75	2,0	4,5
	DNMG 110404ER-SI	DNMG 331ER-SI						●			○	0,4	0,20	0,24	0,8	3,3
	DNMG 110408ER-SI	DNMG 332ER-SI						●			○	0,8	0,20	0,48	0,8	3,3
	DNMG 150408ER-SI	DNMG 432ER-SI						●			○	0,8	0,20	0,48	0,8	4,5
	DNMG 150604ER-SI	DNMG 441ER-SI			●			●			●	0,4	0,20	0,24	0,8	4,5
	DNMG 150608ER-SI	DNMG 442ER-SI			●			●			●	0,8	0,20	0,48	0,8	4,5
	DNMG 110404EL-SI	DNMG 331EL-SI						●			○	0,4	0,20	0,24	0,8	3,3
	DNMG 110408EL-SI	DNMG 332EL-SI						●			○	0,8	0,20	0,48	0,8	3,3
	DNMG 150408EL-SI	DNMG 432EL-SI						●			○	0,8	0,20	0,48	0,8	4,5
	DNMG 150604EL-SI	DNMG 441EL-SI			●			●			●	0,4	0,20	0,24	0,8	4,5
	DNMG 150608EL-SI	DNMG 442EL-SI			●			●			●	0,8	0,20	0,48	0,8	4,5

所有尺寸 / All dimensions [mm]

● 标准库存产品 / Stock Assort.
● 标准库存产品 / New Stock Assort.
○ 非标准库存产品 / Non-stock Assort.
○ 非标准库存产品 / New Non-stock Assort.

SNMG

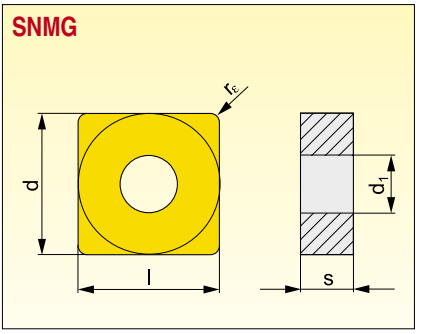

规格 Size	l	d	d_1	s	
1204	12,700	12,700	5,16	4,76	
1506	15,875	15,875	6,35	6,35	
1906	19,050	19,050	7,94	6,35	
2509	25,400	25,400	9,12	9,52	

断屑槽 Chip breaker	ISO	ANSI	材质等级 / Grades									半径 Radius	每转进给量 Feed per rev.		半径 Radius	
			6605	6615	6630	6640	9210	9230	9235	8030		r_ε	f_{min}	f_{max}	$a_{p\,min}$	$a_{p\,max}$
	SNMG 150608E-DM	SNMG 542E-DM						●				0,8	0,15	0,68	1,0	7,0
	SNMG 120404E-F	SNMG 431E-F		○	○			●		○		0,4	0,08	0,34	0,5	3,0
	SNMG 120408E-F	SNMG 432E-F		○	○			●		○		0,8	0,08	0,35	0,8	3,0
	SNMG 120404E-FM	SNMG 431E-FM					●	●		●		0,4	0,10	0,30	0,5	3,0
	SNMG 120408E-FM	SNMG 432E-FM					●	●		●		0,8	0,15	0,45	0,8	3,0
	SNMG 120412E-FM	SNMG 433E-FM					●	●		●		1,2	0,15	0,45	1,2	3,0
	SNMG 120416E-FM	SNMG 434E-FM					●	●		●		1,6	0,15	0,45	1,6	3,0
	SNMG 120408E-M	SNMG 432E-M	●	●	●	●	●	●	●			0,8	0,15	0,60	0,8	6,0
	SNMG 120412E-M	SNMG 433E-M		○	○	●	●	●	●			1,2	0,15	0,60	1,2	6,0
	SNMG 120416E-M	SNMG 434E-M					●	●				1,6	0,17	0,80	1,6	6,0
	SNMG 150612E-M	SNMG 543E-M			●	●	●	●				1,2	0,17	0,80	1,2	8,0
	SNMG 190612E-M	SNMG 643E-M		○	●	●	●	●				1,2	0,17	0,80	1,2	8,0
	SNMG 190616E-M	SNMG 644E-M		○	○		●	●				1,6	0,17	0,80	1,6	8,0
	SNMG 120408E-R	SNMG 432E-R	●	●	●	●	●	●	●			0,8	0,25	0,60	2,0	6,0
	SNMG 120412E-R	SNMG 433E-R	○	●	●	●	●	●	●			1,2	0,25	0,70	2,0	6,0
	SNMG 120416E-R	SNMG 434E-R	○	○			●	●				1,6	0,30	0,80	2,0	6,0
	SNMG 150612E-R	SNMG 543E-R	●	●		●	●	●	●			1,2	0,25	0,70	2,0	7,0
	SNMG 150616E-R	SNMG 544E-R	○	○	●	○	●	●	●			1,6	0,25	0,70	2,0	7,0
	SNMG 190612E-R	SNMG 643E-R	○	●	●	●	●	●	●			1,2	0,25	0,70	2,0	9,0
	SNMG 190616E-R	SNMG 644E-R	●	●	●	●	●	●	●			1,6	0,30	0,80	2,0	9,0

● 标准库存产品 / Stock Assort.
● 标准库存产品 / New Stock Assort.
○ 非标准库存产品 / Non-stock Assort.
○ 非标准库存产品 / New Non-stock Assort.

所有尺寸 / All dimensions [mm]

PRAMET

断屑槽 Chip breaker	ISO	ANSI	材质等级 / Grades										半径 Radius	每转进给量 Feed per rev.		半径 Radius	
			6605	6615	6630	6640	9210	9230	9235	8030			r_ε	f_{min}	f_{max}	$a_{p\,min}$	$a_{p\,max}$
	SNMG 120408E-RM	SNMG 432E-RM				●	●	●	●				0,8	0,20	0,50	1,0	7,0
	SNMG 120412E-RM	SNMG 433E-RM				●	●	●	●				1,2	0,25	0,70	1,5	7,0
	SNMG 120416E-RM	SNMG 434E-RM					●	●	●				1,6	0,30	0,75	2,0	7,0
	SNMG 150612E-RM	SNMG 543E-RM				●	●	●	●				1,2	0,25	0,70	1,5	8,0
	SNMG 150616E-RM	SNMG 544E-RM					●	●	●				1,6	0,30	0,80	2,0	8,0
	SNMG 190612E-RM	SNMG 643E-RM				●	●	●	●				1,2	0,25	0,70	1,5	10,0
	SNMG 190616E-RM	SNMG 644E-RM					●	●	●				1,6	0,30	0,80	2,0	10,0
	SNMG 250924E-RM	SNMG 866E-RM				●	●	●	●				2,4	0,40	1,20	2,4	15,0
	SNMG 120408E-NM	SNMG 432E-NM						●	●				0,8	0,20	0,50	0,8	3,0
	SNMG 120412E-NM	SNMG 433E-NM						●	●				1,2	0,20	0,50	1,2	3,5

所有尺寸 / All dimensions [mm]

● 标准库存产品 / Stock Assort.
● 标准库存产品 / New Stock Assort.

○ 非标准库存产品 / Non-stock Assort.
○ 非标准库存产品 / New Non-stock Assort.

SNMM

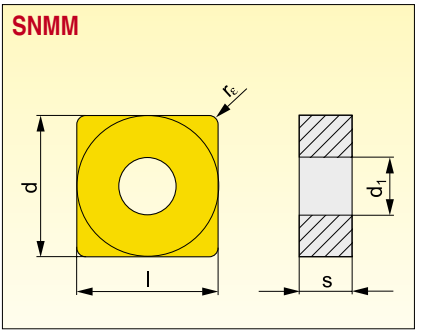

规格 Size	l	d	d_1	s	
1204	12,700	12,700	5,16	4,76	
1506	15,875	15,875	6,35	6,35	
1906	19,050	19,050	7,94	6,35	
2507	25,400	25,400	9,12	7,94	
2509	25,400	25,400	9,12	9,52	

断屑槽 Chip breaker	ISO	ANSI	材质等级 / Grades									半径 Radius	每转进给量 Feed per rev.		半径 Radius	
			6630	6635	6640	9210	9230	9235	8030	8040		r_ε	f_{min}	f_{max}	$a_{p\,min}$	$a_{p\,max}$
	SNMM 120412E-DR	SNMM 433E-DR	●		●		●	●				1,2	0,30	0,85	2,5	8,4
	SNMM 150612E-DR	SNMM 543E-DR			○		●	●				1,2	0,30	0,85	2,5	9,0
	SNMM 190612E-DR	SNMM 643E-DR	●		●		●	●				1,2	0,30	0,85	2,5	9,0
	SNMM 190616E-DR	SNMM 644E-DR	○		○		●	●				1,6	0,30	0,85	2,5	9,0
	SNMM 190616E-HR	SNMM 644E-HR	●		●		●	●		●		1,6	0,50	1,36	5,0	13,3
	SNMM 190624E-HR	SNMM 646E-HR	○		○		●	●		○		2,4	0,50	1,40	5,0	13,3
	SNMM 250716E-HR	SNMM 854E-HR			○		●	●		●		1,6	0,50	1,36	5,0	14,0
	SNMM 250724E-HR	SNMM 856E-HR	○		●		●	●		●		2,4	0,50	1,40	5,0	14,0
	SNMM 250732E-HR	SNMM 858E-HR	○				●					3,2	0,50	1,40	5,0	14,0
	SNMM 250924E-HR	SNMM 866E-HR	●		○		●	●		○		2,4	0,50	1,40	5,0	14,0
	SNMM 250932E-HR	SNMM 868E-HR					●	●				3,2	0,50	1,40	5,0	14,0
	SNMM 120408E-NR	SNMM 432E-NR	●		●		●	●	●			0,8	0,25	0,68	1,0	8,4
	SNMM 120408E-NR2	SNMM 432E-NR2					●	●				0,8	0,30	0,55	0,8	7,0
	SNMM 120412E-NR2	SNMM 433E-NR2					●	●				1,2	0,32	0,70	1,2	7,5
	SNMM 150612E-NR2	SNMM 543E-NR2		○			●	●				1,2	0,30	0,70	1,2	9,0
	SNMM 150616E-NR2	SNMM 544E-NR2						●				1,6	0,35	0,90	1,6	9,0
	SNMM 190612E-NR2	SNMM 643E-NR2					●	●				1,2	0,32	0,70	1,5	12,0
	SNMM 190616E-NR2	SNMM 644E-NR2	○				●	●				1,6	0,35	0,90	1,6	12,0
	SNMM 190624E-NR2	SNMM 646E-NR2					●	●				2,4	0,40	1,20	2,5	12,0
	SNMM 250724E-NR2	SNMM 856E-NR2	○				●	●				2,4	0,50	1,40	3,0	16,0
	SNMM 250924E-NR2	SNMM 866E-NR2		●			●			●		2,4	0,50	1,60	3,0	16,0

● 标准库存产品 / Stock Assort.
● 标准库存产品 / New Stock Assort.
○ 非标准库存产品 / Non-stock Assort.
○ 非标准库存产品 / New Non-stock Assort.

所有尺寸 / All dimensions [mm]

PRAMET

断屑槽 Chip breaker	ISO	ANSI	材质等级 / Grades									半径 Radius	每转进给量 Feed per rev.		半径 Radius	
			6630	6635	6640	9210	9230	9235	8030	8040		r_ε	f_{min}	f_{max}	$a_{p\,min}$	$a_{p\,max}$
	SNMM 120408E-OR	SNMM 432E-OR			○	●	●	●				0,8	0,30	0,68	1,5	6,0
	SNMM 120412E-OR	SNMM 433E-OR			○		●	●				1,2	0,32	0,70	2,0	6,0
	SNMM 120416E-OR	SNMM 434E-OR					●					1,6	0,35	0,80	2,0	8,0
	SNMM 150608E-OR	SNMM 542E-OR			○		●					0,8	0,35	0,60	2,0	8,0
	SNMM 150612E-OR	SNMM 543E-OR			○	●	●	●				1,2	0,35	1,00	2,0	9,0
	SNMM 150616E-OR	SNMM 544E-OR			○	●	●					1,6	0,35	1,00	2,0	9,0
	SNMM 190612E-OR	SNMM 643E-OR	○		○	●	●	●				1,2	0,35	1,00	3,0	10,0
	SNMM 190616E-OR	SNMM 644E-OR	●		●	●	●	●				1,6	0,38	1,20	2,0	10,0
	SNMM 190624E-OR	SNMM 646E-OR	○		○	●	●					2,4	0,45	1,20	3,5	12,0
	SNMM 250716E-OR	SNMM 854E-OR	○		○	●	●	●				1,6	0,45	1,36	4,0	16,0
	SNMM 250724E-OR	SNMM 856E-OR	●		○	●	●	●				2,4	0,45	1,70	4,0	16,0
	SNMM 250924E-OR	SNMM 866E-OR	○		○	●	●	●				2,4	0,30	1,70	3,0	16,0
	SNMM 190616E-OR1	SNMM 644E-OR1	●				●	●				1,6	0,37	1,20	3,0	10,0
	SNMM 250724S-SR	SNMM 856S-SR	○		●		●					2,4	0,70	1,60	5,0	16,0
	SNMM 250924S-SR	SNMM 866S-SR	●		●		●	●				2,4	0,70	1,60	5,0	16,0
	SNMM 190616S-923	SNMM 644S-923						●				1,6	0,45	1,36	3,0	13,0
	SNMM 250716S-923	SNMM 854S-923						●				1,6	0,45	1,36	4,0	16,0
	SNMM 250724S-923	SNMM 856S-923						●				2,4	0,45	1,50	3,0	13,0
	SNMM 250924S-923	SNMM 866S-923						●				2,4	0,45	1,50	3,0	13,0

所有尺寸 / All dimensions [mm]

● 标准库存产品 / Stock Assort.
● 标准库存产品 / New Stock Assort.

○ 非标准库存产品 / Non-stock Assort.
○ 非标准库存产品 / New Non-stock Assort.

TNMG

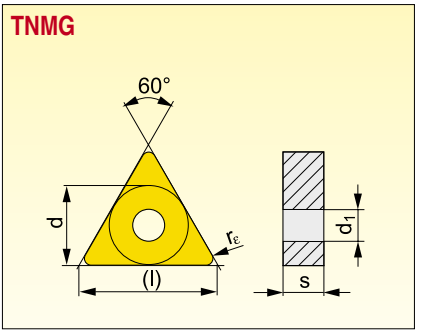

规格 Size	(l)	d	d_1	s	
1604	16,5	9,525	3,81	4,76	
2204	22,0	12,700	5,16	4,76	
2706	27,5	15,875	6,35	6,35	
3309	33,0	19,050	7,94	9,52	

断屑槽 Chip breaker	ISO	ANSI	材质等级 / Grades										半径 Radius	每转进给量 Feed per rev.		半径 Radius	
			6605	6615	6630	6640	9210	9230	9235	8016	8030		r_ε	f_{min}	f_{max}	$a_{p\,min}$	$a_{p\,max}$
	TNMG 160404E-F	TNMG 331E-F		●	●			●			○		0,4	0,08	0,24	0,5	3,0
	TNMG 160408E-F	TNMG 332E-F		●				●			○		0,8	0,08	0,35	0,8	3,0
	TNMG 160404E-FF	TNMG 331E-FF								●			0,4	0,06	0,20	0,4	1,5
	TNMG 160408E-FF	TNMG 332E-FF								●			0,8	0,08	0,25	0,8	1,5
	TNMG 160404E-FM	TNMG 331E-FM					●	●			●		0,4	0,10	0,24	0,5	3,0
	TNMG 160408E-FM	TNMG 332E-FM					●	●			●		0,8	0,15	0,45	0,8	3,0
	TNMG 160412E-FM	TNMG 333E-FM					●	●			●		1,2	0,15	0,45	1,2	3,0
	TNMG 160404E-M	TNMG 331E-M		●	○		●	●					0,4	0,17	0,24	0,8	3,0
	TNMG 160408E-M	TNMG 332E-M	●	●	●	●	●	●	●				0,8	0,15	0,48	0,8	5,0
	TNMG 160412E-M	TNMG 333E-M		●	○	○	●	●					1,2	0,15	0,60	1,2	5,0
	TNMG 220408E-M	TNMG 432E-M	○	●	●	●	●	●	●				0,8	0,15	0,48	0,8	6,0
	TNMG 220412E-M	TNMG 433E-M	○	○	●	●	●	●	●				1,2	0,17	0,72	1,2	6,0
	TNMG 160408E-R	TNMG 332E-R	●	●	○	○	●	●	●				0,8	0,25	0,48	2,0	5,0
	TNMG 160412E-R	TNMG 333E-R	○	○		○	●	●	●				1,2	0,25	0,70	2,0	5,0
	TNMG 220408E-R	TNMG 432E-R	●	○	●	○	●	●	●				0,8	0,25	0,48	2,0	6,0
	TNMG 220412E-R	TNMG 433E-R	●	○	●	○	●	●	●				1,2	0,25	0,70	2,0	6,0
	TNMG 220416E-R	TNMG 434E-R	○	●	○	●	●	●	●				1,6	0,25	0,80	2,0	6,0
	TNMG 160408E-RM	TNMG 332E-RM					●	●	●				0,8	0,20	0,48	1,0	5,3
	TNMG 160412E-RM	TNMG 333E-RM					●	●	●				1,2	0,25	0,65	1,5	5,3
	TNMG 220408E-RM	TNMG 432E-RM					●	●	●				0,8	0,20	0,48	1,0	7,0
	TNMG 220412E-RM	TNMG 433E-RM					●	●	●				1,2	0,25	0,65	1,5	7,0
	TNMG 220416E-RM	TNMG 434E-RM					●	●	●				1,6	0,30	0,75	2,0	7,0
	TNMG 270616E-RM	TNMG 544E-RM						●	●				1,6	0,35	0,75	2,0	8,9
	TNMG 270624E-RM	TNMG 546E-RM						●	●				2,4	0,35	0,80	3,0	8,9
	TNMG 330924E-RM	TNMG 666E-RM							●				2,4	0,45	0,90	3,0	10,9

● 标准库存产品 / Stock Assort.
● 标准库存产品 / New Stock Assort.
○ 非标准库存产品 / Non-stock Assort.
○ 非标准库存产品 / New Non-stock Assort.

所有尺寸 / All dimensions [mm]

PRAMET

断屑槽 Chip breaker	ISO	ANSI	材质等级 / Grades									半径 Radius	每转进给量 Feed per rev.		半径 Radius	
			6605	6615	6630	6640	9210	9230	9235	8016	8030	r_ε	f_{min}	f_{max}	$a_{p\,min}$	$a_{p\,max}$
	TNMG 160404E-NM	TNMG 331E-NM						●	●			0,4	0,15	0,24	0,5	3,0
	TNMG 160408E-NM	TNMG 332E-NM						●	●			0,8	0,20	0,40	1,0	3,0
	TNMG 220408E-NM	TNMG 432E-NM						●	●		●	0,8	0,20	0,40	1,0	3,5
	TNMG 220412E-NM	TNMG 433E-NM						●	●			1,2	0,20	0,40	1,2	3,5
	TNMG 160404ER-SI	TNMG 331ER-SI			●			●			●	0,4	0,20	0,24	0,8	5,0
	TNMG 160408ER-SI	TNMG 332ER-SI			●			●			●	0,8	0,20	0,48	0,8	5,0
	TNMG 160404EL-SI	TNMG 331EL-SI			●			●			●	0,4	0,20	0,24	0,8	5,0
	TNMG 160408EL-SI	TNMG 332EL-SI			●			●			●	0,8	0,20	0,48	0,8	5,0

所有尺寸 / All dimensions [mm]

● 标准库存产品 / Stock Assort.
● 标准库存产品 / New Stock Assort.

○ 非标准库存产品 / Non-stock Assort.
○ 非标准库存产品 / New Non-stock Assort.

可转位刀片
INDEXABLE CUTTING INSERTS

WNMG

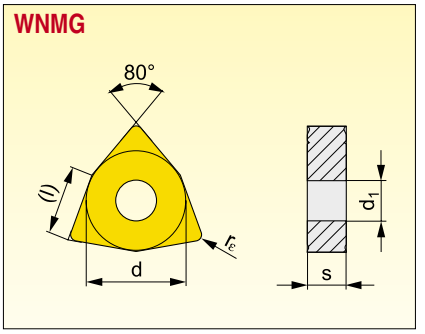

规格 Size	(l)	d	d_1	s	
0604	6,5	9,525	3,81	4,76	
06T3	6,5	9,525	3,81	3,97	
0804	8,7	12,700	5,16	4,76	

断屑槽 Chip breaker	ISO	ANSI	材质等级 / Grades									半径 Radius	每转进给量 Feed per rev.		半径 Radius	
			6605	6615	6630	6640	9210	9230	9235	8016	8030	r_ε	f_{min}	f_{max}	$a_{p\,min}$	$a_{p\,max}$
	WNMG 06T308E-DM	WNMG 3(2.5)2E-DM						●				0,8	0,15	0,60	1,0	4,2
	WNMG 080408E-DM	WNMG 432E-DM						●	●			0,8	0,15	0,60	1,0	5,6
	WNMG 060404E-F	WNMG 331E-F		○				●		○	●		0,4	0,08	0,30	0,5	3,0
	WNMG 080404E-F	WNMG 431E-F		●	○			●		●	●		0,4	0,08	0,30	0,5	3,0
	WNMG 080408E-F	WNMG 432E-F		●	○			●		●	●		0,8	0,08	0,35	0,8	3,0
	WNMG 060402E-FF	WNMG 33(0.5)E-FF								●			0,2	0,06	0,15	0,2	1,5
	WNMG 060404E-FF	WNMG 331E-FF								●			0,4	0,06	0,20	0,4	1,5
	WNMG 080404E-FF	WNMG 431E-FF								●			0,4	0,06	0,20	0,4	1,5
	WNMG 080408E-FF	WNMG 432E-FF								●			0,8	0,08	0,25	0,8	1,5
	WNMG 060404E-FM	WNMG 331E-FM					●	●			●		0,4	0,10	0,30	0,5	3,0
	WNMG 060408E-FM	WNMG 332E-FM					●	●			●		0,8	0,10	0,35	0,8	3,0
	WNMG 080404E-FM	WNMG 431E-FM					●	●			●		0,4	0,10	0,30	0,5	3,0
	WNMG 080408E-FM	WNMG 432E-FM					●	●			●		0,8	0,15	0,45	0,8	3,0
	WNMG 080412E-FM	WNMG 433E-FM					●	●			●		1,2	0,15	0,45	1,2	4,0
	WNMG 060404E-M	WNMG 331E-M		○			●	●				0,4	0,17	0,30	0,8	3,0
	WNMG 060408E-M	WNMG 332E-M		●	○	●	●	●	●			0,8	0,15	0,60	0,8	4,0
	WNMG 080404E-M	WNMG 431E-M		●	○		●	●				0,4	0,17	0,30	0,8	3,0
	WNMG 080408E-M	WNMG 432E-M	●	●	●	●	●	●	●	○		0,8	0,15	0,60	0,8	5,6
	WNMG 080412E-M	WNMG 433E-M	●	●	●	●	●	●	●			1,2	0,15	0,60	1,2	5,6
	WNMG 080408E-R	WNMG 432E-R	●	●	●	●	●	●	●			0,8	0,25	0,60	2,0	5,6
	WNMG 080412E-R	WNMG 433E-R	●	●	●	○	●	●	●			1,2	0,25	0,70	2,0	5,6
	WNMG 080416E-R	WNMG 434E-R	○	●			●	●				1,6	0,30	0,80	2,0	5,6

● 标准库存产品 / Stock Assort.
● 标准库存产品 / New Stock Assort.
○ 非标准库存产品 / Non-stock Assort.
○ 非标准库存产品 / New Non-stock Assort.

所有尺寸 / All dimensions [mm]

断屑槽 Chip breaker	ISO	ANSI	材质等级 / Grades										半径 Radius	每转进给量 Feed per rev.		半径 Radius	
			6605	6615	6630	6640	9210	9230	9235	8016	8030		r_ε	f_{min}	f_{max}	$a_{p\,min}$	$a_{p\,max}$
	WNMG 060412E-RM	WNMG 333E-RM					●	●	●				1,2	0,25	0,60	1,3	4,0
	WNMG 080408E-RM	WNMG 432E-RM				●	●	●	●				0,8	0,20	0,55	1,0	5,0
	WNMG 080412E-RM	WNMG 433E-RM					●	●	●				1,2	0,25	0,70	1,5	5,0
	WNMG 080416E-RM	WNMG 434E-RM					●	●	●				1,6	0,30	0,75	2,0	5,0
	WNMG 060408W-F	WNMG 332W-F		○			●	●					0,8	0,15	0,60	0,8	4,2
	WNMG 080404W-F	WNMG 431W-F		○			●	●					0,4	0,15	0,30	0,4	4,4
	WNMG 060408W-M	WNMG 332W-M		○			●	●					0,8	0,15	0,60	0,8	3,0
	WNMG 060412W-M	WNMG 333W-M		○			●	●					1,2	0,15	0,90	1,2	3,0
	WNMG 080408W-M	WNMG 432W-M		●			●	●					0,8	0,15	0,60	0,8	4,0
	WNMG 080412W-M	WNMG 433W-M		○			●	●					1,2	0,20	0,90	1,2	4,0
	WNMG 060404E-NM	WNMG 331E-NM						●	●				0,4	0,15	0,30	0,5	3,0
	WNMG 060408E-NM	WNMG 332E-NM						●	●				0,8	0,20	0,40	0,8	3,0
	WNMG 060412E-NM	WNMG 333E-NM						○	●				1,2	0,20	0,50	1,2	3,5
	WNMG 080404E-NM	WNMG 431E-NM						●	●				0,4	0,15	0,30	0,5	3,0
	WNMG 080408E-NM	WNMG 432E-NM						●	●		●		0,8	0,20	0,50	0,8	3,0
	WNMG 080412E-NM	WNMG 433E-NM						●	●				1,2	0,20	0,50	1,2	3,5
	WNMG 060404ER-SI	WNMG 331ER-SI						●			○		0,4	0,20	0,30	0,8	4,2
	WNMG 080404ER-SI	WNMG 431ER-SI						●			●		0,4	0,20	0,30	0,8	5,0
	WNMG 080408ER-SI	WNMG 432ER-SI			○			●			●		0,8	0,20	0,50	0,8	5,0
	WNMG 060404EL-SI	WNMG 331EL-SI						●			○		0,4	0,20	0,30	0,8	4,2
	WNMG 080404EL-SI	WNMG 431EL-SI						●			●		0,4	0,20	0,30	0,8	5,0
	WNMG 080408EL-SI	WNMG 432EL-SI			○			●			●		0,8	0,20	0,50	0,8	5,0

所有尺寸 / All dimensions [mm]

● 标准库存产品 / Stock Assort.
● 标准库存产品 / New Stock Assort.

○ 非标准库存产品 / Non-stock Assort.
○ 非标准库存产品 / New Non-stock Assort.

PRAMET

技术
部分

TECHNICAL
PART

槽型 Geometry	图片 Photo	工件材料组 Workpiece material group		P	M	K	N	S	H
			车削 Turning						
RM		精加工 Finishing							
	切削刃轮廓 Profi le of cutting edge	半精加工 Medium		■	■	■		□	□
	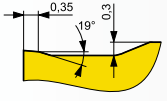	粗加工 Roughing		■	■	■		□	□

应用示意图 Diagram of application

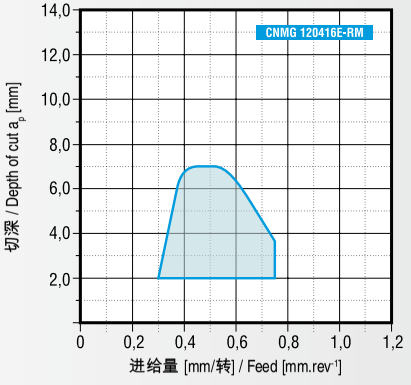

描述 Description	适用刀片 / Aplied to inserts: CNMG. DNMG, SNMG, TNMG, WNMG
- 半精和粗加工 - 主要应用范围 – 加工P, M 和K 组材料 - 其他应用范围 – 加工S 组材料 - 一定条件下应用于加工H组材料 - 连续和断续切削 - semi-roughing and roughing - main application area - material groups P, M, K - other application - material group S - conditional application - material group H - continual and interupted cut	
切削工况范围 / Range of cutting conditions:	
f_z	0,30 ÷ 0,80 [mm/齿] [mm.tooth^{-1}]
a_p	1,5 ÷ 7,0 [mm]

■ - 主要应用 / Main applicatio □ - 其他应用 / Other applications □ - 有条件应用 / Conditional applications

PRAMET

车削 / TURNING

刀具 ISO C
TOOLS ISO C

刀具 ISO D
TOOLS ISO D

刀具 ISO M
TOOLS ISO M

刀具 ISO P、刀头、刀
TOOLS ISO P, HEADS, CARTRIDGES

刀具 ISO S、刀卡 ISO S
TOOLS ISO S, CARTRIDGES ISO S

切断和切槽刀具
PARTING AND GROOVING TOOLS

螺纹加工刀具
THREADING TOOLS

刀片
INSERTS

产品列表	List of products	3
ISO 代码名称 - 刀具	ISO code designation - Tools	4 – 5
刀具 ISO C - 外圆加工	Tools ISO C - external	6 – 11
刀具 ISO C - 内孔加工	Tools ISO C - internal	12 – 15
刀具 ISO D - 外圆加工	Tools ISO D - external	16 – 21
刀具 ISO D - 内孔加工	Tools ISO D - internal	22 – 24
刀具 ISO M - 外圆加工	Tools ISO M - external	25 – 28
刀具 ISO P - 外圆加工	Tools ISO P - external	29 – 47
刀具 ISO P - 外圆加工	Tools ISO P - internal	48 – 53
刀头的 ISO 代码	ISO code for heads	54
刀头	Heads	55 – 64
用于重载粗加工的刀卡的 ISO 代码	ISO code for Cartridges for heavy roughing	65
刀卡，用于重载粗加工	Cartridges for heavy roughing	66 – 73
可调式刀头的 ISO 代码	ISO code for adjustable heads	74
可调式刀头	Adjustable heads	75 – 80
刀具 ISO S - 外圆加工	Tools ISO S - external	81 – 100
刀具 ISO S - 内孔加工	Tools ISO S - internal	101 – 113
刀卡 ISO S	Cartridges ISO S	114 – 116
ISO 代码	ISO code	118 – 119
切断和切槽刀具	Parting and grooving tools	120 – 136
ISO 代码 - 螺纹加工	ISO code - threading	137
螺纹加工刀具	Threading tools	138 – 142
ISO 代码 - 刀片	ISO code - inserts	144 – 145
产品系列 - 刀片	Product line - Inserts	146 – 148
刀片 ISO C、M、P、S	Inserts ISO C, M, P, S	149 – 195
切断和切槽刀片	Parting and grooving inserts	196 – 204
ISO 代码 - 用于螺纹加工的刀片	ISO code - Inserts for threading	205
刀片，用于螺纹加工	Inserts for threading	206 – 225
带 CBN 和 PCD 的刀片	Inserts with CBN and PCD	226 – 228
技术部件	Technical part	229 – 328

刀柄 Holder	4
CKJN-Ext	7
CSKP-Int	13
CSSP-Ext	8
CTAP-Ext	9
CTCP-Ext	10
CTFP-Ext	11
CTFP-Int	14
CTGP-Int	15
DCLN-Ext	17
DCLN-Int	23
DDJN-Ext	18
DKH	64
DKR	73
DSBN-Ext	19
DTFN-Int	24
DTGN-Ext	20
DWLN-Ext	21
GFIR 03-Axial	122
GFIR 04-Axial	123
GFIR-Ext	121
GFKR-Ext	121
GG.R-Int	125
GGIR Axial90	124
GLCC	126
GLXCL	127
KHP-CBN	56
KHP-CLN	57
KHP-LBN	58
KHP-RSC	59
KHP-SBN	60

刀柄 Holder	4
KHP-SSN	61
KHP-TGN	62
KHS-SBC	63
KP-LBN	67
KP-LKN	68
KP-SBN	69
KP-SKN	70
KS-SBC	71
KS-SKC	72
MS-EN	128
MTJN-Ext	26
MVJN-Ext	27
MWLN-Ext	28
PCBN-Ext	30
PCKN-Ext	31
PCLN-Ext	32
PCLN-Int	49
PDJN-Ext	33
PDNN-Ext	34
PDUN-Int	50
PDXN-Ext	35
PLBN-Ext	36
PRDCN-Ext	37
PRSC-Ext	38
PRSN-Ext	39
PSBN-Ext	40
PSDNN-Ext	41
PSKN-Ext	42
PSKN-Int	51
PSSN-Ext	43

刀柄 Holder	4
PTFN-Ext	44
PTFN-Int	52
PTGN-Ext	45
PTTN-Ext	46
PWLN-Ext	47
PWLN-Int	53
S…R/L10 CA-..	114-116
SCAC-Ext	82
SCBC-Ext	83
SCFC-Ext	84
SCFC-Int	102
SCKC-Int	103
SCLC-Ext	85
SCLC-Int	104
SCXC-Int	105
SDJC-Ext	86
SDNC-Ext	87
SDQC-Int	106
SDUC-Int	107
SDZC-Int	108
SER	139
SER-S	140
SH-DSH	80
SH-PCKN	76
SH-PCLN	77
SH-PDXN	78
SH-PWLN	79
SIR	141
SIR-S	142
SRDC-Ext	88

刀柄 Holder	4
SRSC-Ext	89
SSBC-Ext	90
SSDC-Ext	91
SSKC-Ext	92
SSSC-Int	109
STFC-Ext	93
STFC-Int	110
STJC-Ext	94
SVHC-Ext	95
SVJC-Ext	96
SVPC-Ext	97
SVQC-Int	111
SVUC-Int	112
SVVC-Ext	98
SVXC-Ext	99
SWLC-Ext	100
SWLC-Int	113
XLCFN blade1	133
XLCFN blade2	135
XLCFN blade3	136
XLCFN DU tools1	134
XLCFN tools2	135
XLCFN tools3	136
XLCFNRL	129
XLCFR-1	131
XLCFR-2	132
XLXFL	130

刀片 INSERTS	4
CCGT	149
CCMT	150
CCMW	151
CNMA PKBN	226
CNMA	151
CNMG	152
CNMM	154
DCGT	156
DCMT	157
DCMW PKBN	226
DCMW	158
DNMA	158
DNMG	159
DNMM	161
KNUX	162
LCMF 13	197
LCMF 16, 20	198
LCMX MOEN	199
LCMX TN	200
LFMX	201

刀片 INSERTS	4
LFUX	202
LNUX 40	164
LNUX	163
RCGT	165
RCMT	166
RCMW	167
RCMX	168
RCUM	169
RNMG	170
SCGT	171
SCMT	172
SCMW	173
SNMA	173
SNMG	174
SNMM	175
SNMX	177
SPMR	177
SPUN	178
TCGT	179
TCMT	180

刀片 INSERTS	4
TCMW	181
TN ACME29 Ext	225
TN ACME29 Int	225
TN API Ext	217
TN API Int	217
TN M60 CP Ext	211
TN M60 CP Int	211
TN M60 Ext	207
TN M60 Int	209
TN M60-S CP Ext	212
TN M60-S CP Int	212
TN oblý30 Ext	216
TN oblý30 Int	216
TN TRPZ30 Ext	218
TN TRPZ30 Int	218
TN TRPZ30-S Ext	220
TN TRPZ30-S Int	220
TN UN60 Ext	221
TN UN60 Int	223
TN W55 Ext	213

刀片 INSERTS	4
TN W55 Int	214
TN16 ZZ Ext	203
TN16 ZZ Int	204
TNMA	181
TNMG	182
TNMM	183
TPMR	184
TPUN	185
VBMT	186
VCGT	186
VCMT	187
VCMW	188
VCMW PKBN	226
VNMG	189
WCGT	190
WCMT	191
WNMA	192
WNMG	193
WNMM	195

ISO 代码名称 - 刀具 - 外圆加工
ISO CODE DESIGNATION - TOOLS - EXTERNAL

1 夹紧名称 Clamping designation

C	
D	
P	
M	
S	
X	
G	

2 刀片形状 Insert shape

S	C 80°
T	D 55°
R	K 55°
W 80°	V 35°
L	X 特殊规格 Special

3 刀具类型 - 主偏角 Tool style - cutting edge angle

A 90°	B 75°	C 90°	D 45°	D
E 60°	F 90°	G 90°	H 107°30´	J 93°
K 75°	L 95°	M 50°	N 62°30´	P 117°30´
Q 107°30´	R 75°	S 45°	S	T 60°
U 93°	V 72°30´	W 60°	X 特殊规格 Special	Y 85°
Z κ				

4 后角 Clearance angle

N	C	P
α_n=0°	α_n=7°	α_n=11°

5 切削方向 Direction of cut

R	
L	
N	

1	2	3	4	5		6	7	8	9		10
P	C	L	N	R	-	32	25	L	12	-	S

6 刀柄高度 [mm] Shank height [mm]

08	10	12	16	20	25
32	38	40	45	50	60

7 刀柄宽度 [mm] Shank width [mm]

08	10	12	16	20	25
32	38	40	45	50	60

8 总长 Total lenght

	l_1 [mm]
D	60
E	70
F	80
H	100
J	110
K	125
L	140
M	150
N	160
P	170
Q	180
R	200
S	250
T	300
U	350
V	400
W	450
X	
Y	500

9 切削刃长度 Cutting edge lenght

d [mm]	S	C	D	V	K	W	T	R
6.00								06
6.35		06	07	11			11	
8.00								08
9.525	09	09	11	16	19	06	16	
10.00								10
12.00								12
12.70	12	12	15			08	22	12
15.875	15	16					27	15
16.00								16
19.05	19	19						19
20.00								20
25.00								25
25.40	25	25						25
38.10	38							

10 制造商 [mm] Manufacturer´s [mm]

M	夹紧系统“S”及刀垫 Clamping system „S“ with shim
S	带调节螺钉 With adjusting screws

PRAMET

1

	刀柄 Shank
S	钢制刀杆 Steel shank
A	带冷却液孔的钢制刀柄 Steel shank with coolant hole

2

刀柄 Ø [mm]
Shank Ø [mm]

08	10	12	16	20
25	32	40	50	60

1	2	3		4	5	6	7	8	9		10
A	40	T	-	P	C	L	N	L	12	-	X

3

总长
Total lenght

	l_1 [mm]
D	60
E	70
F	80
H	100
J	110
K	125
L	140
M	150
N	160
P	170
Q	180
R	200
S	250
T	300
U	350
V	400
W	450
X	Special Especial
Y	500

4

夹紧名称
Clamping designation

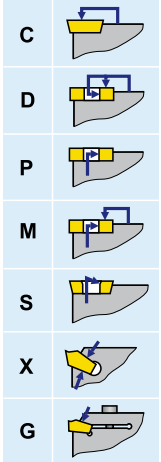

5

刀片形状
Insert shape

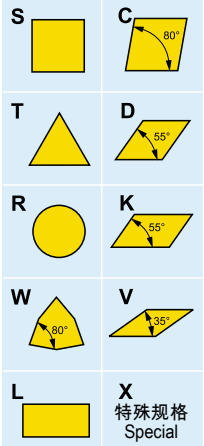

6

刀具类型 - 主偏角
Tool style - cutting edge angle

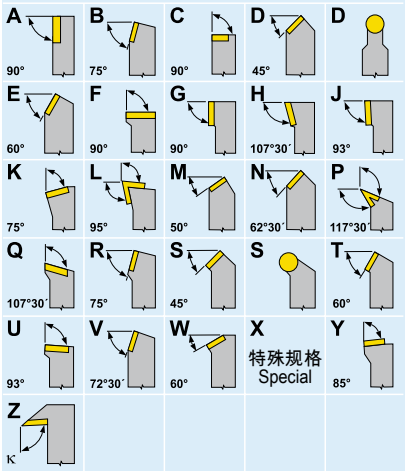

7

后角
Clearance angle

N	C	P
α_n=0°	α_n=7°	α_n=11°

8

切削方向
Direction of cut

R	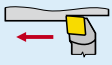
L	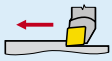

9

切削刃长度
Cutting edge lenght

d [mm]	S	C	D	V	K	W	T	R
6.00								06
6.35		06	07	11			11	
8.00								08
9.525	09	09	11	16	19	06	16	
10.00								10
12.00								12
12.70	12	12	15			08	22	12
15.875	15	16					27	15
16.00								16
19.05	19	19						19
20.00								20
25.00								25
25.40	25	25						25

10

制造商 [mm]
Manufacturer´s [mm]

X	特殊规格刀柄类型 Special shank style
. . 87 90 93 . .	Z 型刀具主偏角 Z -style tool setting angle

产品系列 - ISO C 外圆车削
PRODUCT LINE - ISO C EXTERNAL TURNING

CKJNR/L

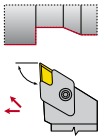

7

CSSPR/L

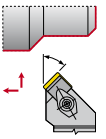

8

CTAPR/L

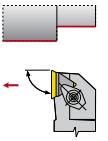

9

CTCPN

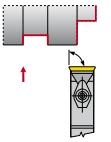

10

CTFPR/L

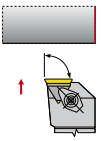

11

PRAMET

CKJNR/L

外圆车削 - ISO C
EXTERNAL TURNING - ISO C

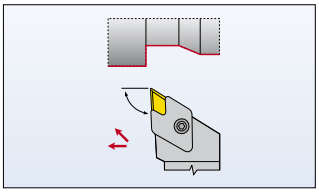

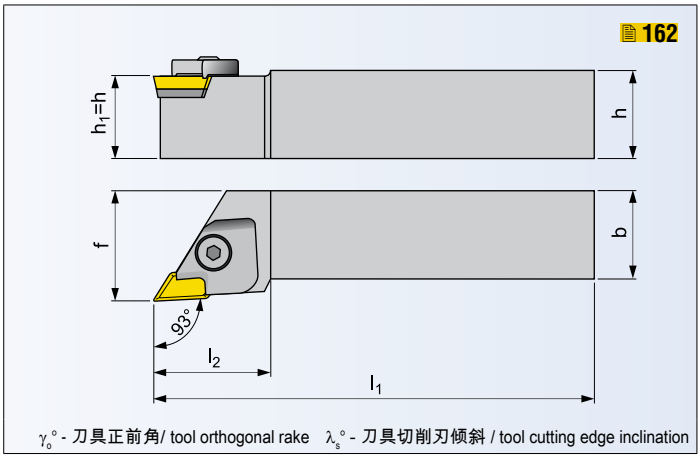

刀具，用于外圆车削 / TOOL FOR EXTERNAL TURNING

ISO	R/L	尺寸 / Dimensions [mm]										kg	备件 Spare parts	刀片 Inserts
		h=h1	b	f	l1	l2max				λs°	γo°			
CKJNR/L 2020 K 16	● / ●	20	20	30	125	34				+1	-5	0.45	R1 / L1	KNUX 1604..
CKJNR/L 2525 M 16	● / ●	25	25	32	150	34				+1	-5	0.70	R / L	KNUX 1604..
CKJNR/L 3225 P 16	● / ●	32	25	32	170	34				+1	-5	1.00	R / L	KNUX 1604..

备件 / SPARE PARTS

类型 Type	弹簧 Spring	销 + 弹簧 Pin + spring	刀垫 Shim	管形铆钉 Tubular rivet	压板 Clamp	夹紧螺钉 Clamp. Screw	扳手 Key	螺丝刀 Screwdriver		
R	PR 07	K 23	KNN 190412 R	NT 03	UP 25	US 83	HXK 4	-		
L	PR 07	K 23	KNN 190412 L	NT 03	UP 26	US 83	HXK 4	-		
R1	PR 07	K 22	KNN 190412 R	NT 03	UP 25	US 83	HXK 4	-		
L1	PR 07	K 22	KNN 190412 L	NT 03	UP 26	US 83	HXK 4	-		

● 标准库存产品 / Stock Assortment ○ 非标准库存产品 / Non-stock Assortment 所有尺寸 / All dimensions [mm]

CSSPR/L

外圆车削 - ISO C
EXTERNAL TURNING - ISO C

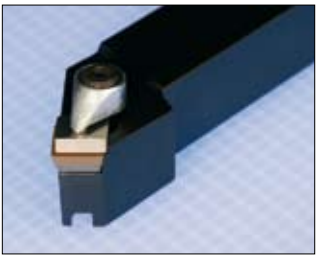

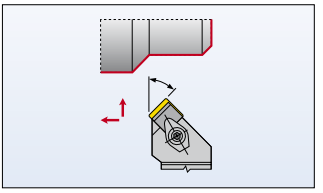

177-178

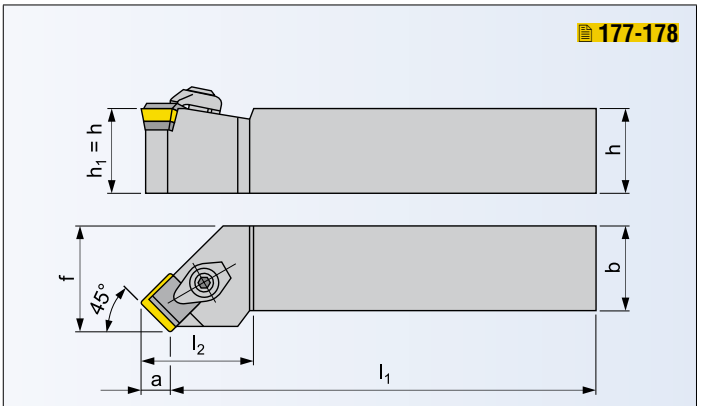

γ_o° - 刀具正前角/ tool orthogonal rake λ_s° - 刀具切削刃倾斜 / tool cutting edge inclination

刀具，用于外圆车削 / TOOL FOR EXTERNAL TURNING

ISO	R/L	尺寸 / Dimensions [mm]										kg	备件 Spare parts	刀片 Inserts
		$h=h_1$	b	f	l_1	l_{2max}	a			λ_s°	γ_o°			
CSSPR/L 2020 K 12	● / ○	20	20	25	125	36	8.3			0	+5	0.40	CSP2	SP.. 1203..
CSSPR/L 2525 M 12	● / ○	25	25	32	150	36	8.3			0	+5	0.75	CSP2	SP.. 1203..
CSSPR/L 3225 P 15	● / ○	32	25	32	170	40	10.2			0	+5	1.40	CSP3	SP.. 1504..
CSSPR/L 4040 R 19	○ / ○	40	40	50	200	45	12.5			0	+5	2.40	CSP4	SP.. 1904..
CSSPR/L 5050 S 25	○ / ○	50	50	60	250	50	16			0	+5	4.00	CSP5	SP.. 2506..

备件 / SPARE PARTS

类型 Type	断屑器 Chip breaker				刀垫 Shim	管形铆钉 Tubular rivet	压板 Clamp	夹紧螺钉 Clamp. Screw	扳手 Key	螺丝刀 Screwdriver
CSP2	SU 121202	1.2	SU 122502	2.5	SPN 120303	NT 03	UP 21	SR 04	HXK 4	-
CSP3	SU 151202	1.2	SU 152502	2.5	SPN 150303	NT 03	UP 21	SR 04	HXK 4	-
CSP4	SU 191602	1.6	SU 193202	3.2	SPN 190405	NT 03	UP 24	SR 24	HXK 6	-
CSP5	SU 254003	4.0	SU 258003	8.0	SPN 250408	NT 03	UP 24	SR 24	HXK 6	-

● 标准库存产品 / Stock Assortiment ○ 非标准库存产品 / Non-stock Assortiment 所有尺寸 / All dimensions [mm]

PRAMET

CTAPR/L

外圆车削 - ISO C
EXTERNAL TURNING - ISO C

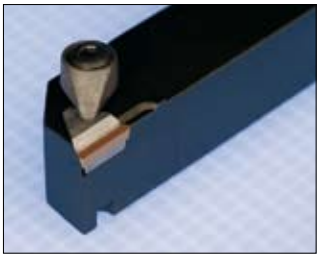

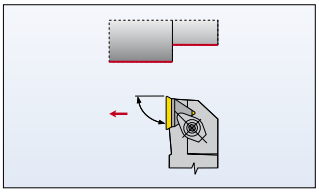

184-185

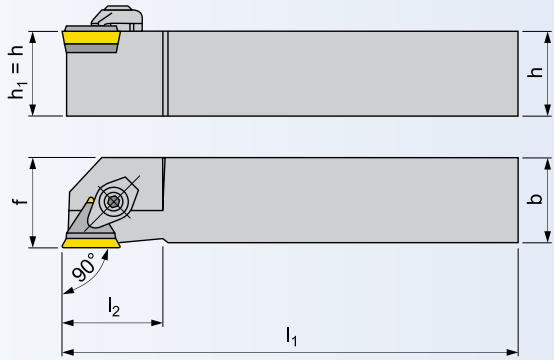

γ_o° - 刀具正前角/ tool orthogonal rake λ_s° - 刀具切削刃倾斜 / tool cutting edge inclination

刀具，用于外圆车削 / TOOL FOR EXTERNAL TURNING

ISO	R/L	尺寸 / Dimensions [mm]										kg	备件 Spare parts	刀片 Inserts
		$h=h_1$	b	f	l_1	l_{2max}				λ_s°	γ_o°			
CTAPR/L 2020 K 16	● / ○	20	20	20.5	125	32				0	+5	0.40	CTP2	TP.. 1603..
CTAPR/L 2525 M 16	● / ○	25	25	25.5	150	32				0	+5	0.75	CTP2	TP.. 1603..
CTAPR/L 3225 P 16	○ / ○	32	25	25.5	170	32				0	+5	1.10	CTP2	TP.. 1603..
CTAPR/L 3232 P 22	● / ○	32	32	33	170	36				0	+5	1.40	CTP3	TP.. 2204..
CTAPR/L 4040 R 22	○ / ○	40	40	41	200	36				0	+5	2.40	CTP3	TP.. 2204..
CTAPR/L 5050 S 27	○ / ○	50	50	51	250	36				0	+5	4.90	CTP5	TP.. 2706..

备件 / SPARE PARTS

类型 Type	断屑器 Chip breaker				刀垫 Shim	管形铆钉 Tubular rivet	压板 Clamp	夹紧螺钉 Clamp. Screw	扳手 Key	螺丝刀 Screwdriver
CTP2	TU 161202	1.2	TU 162502	2.5	TPN 160304	NT 03	UP 21	SR 04	HXK 4	-
CTP3	TU 221602	1.6	TU 223202	3.2	TPN 220304	NT 03	UP 21	SR 04	HXK 4	-
CTP5	TU 274003	4.0	TU 278003	8.0	TPN 270404	NT 03	UP 24	SR 24	HXK 6	-

● 标准库存产品 / Stock Assortiment ○ 非标准库存产品 / Non-stock Assortiment 所有尺寸 / All dimensions [mm]

CTCPN

外圆车削 - ISO C
EXTERNAL TURNING - ISO C

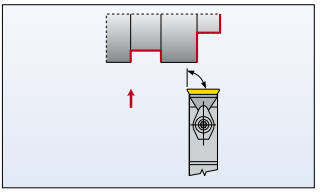

184-185

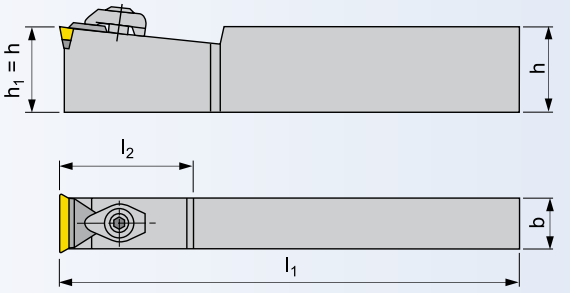

γ_o° - 刀具正前角/ tool orthogonal rake λ_s° - 刀具切削刃倾斜 / tool cutting edge inclination

刀具，用于外圆车削 / TOOL FOR EXTERNAL TURNING

ISO		尺寸 / Dimensions [mm]										kg	备件 Spare parts	刀片 Inserts
		$h=h_1$	b	l_1	l_{2max}					λ_s°	γ_o°			
CTCPN 2509 K 11	●	25	8.9	125	20					0	+5	0.20	CO1	TP.. 1103..
CTCPN 2514 M 16	●	25	13.8	150	34					0	+5	0.40	CTP2	TP.. 1603..
CTCPN 3214 P 16	●	32	13.8	170	34					0	+5	0.45	CTP2	TP.. 1603..
CTCPN 3219 P 22	●	32	18.8	170	44					0	+5	0.80	CTP4	TP.. 2204..

备件 / SPARE PARTS

类型 Type	断屑器 Chip breaker				刀垫 Shim	管形铆钉 Tubular rivet	压板 Clamp	夹紧螺钉 Clamp. Screw	扳手 Key	螺丝刀 Screwdriver
CO1							UP 20	US 48 (M4x12.0)	-	SDR T15
CTP2	TU 161202	1.2	TU 162502	2.5	TPN 160304	NT 03	UP 21	SR 04	HXK 4	
CTP4	TU 221602	1.6	TU 223202	3.2	TPN 220304	NT 03	UP 24	SR 24	HXK 6	

● 标准库存产品 / Stock Assortment ○ 非标准库存产品 / Non-stock Assortment 所有尺寸 / All dimensions [mm]

PRAMET

CTFPR/L

外圆车削 - ISO C
EXTERNAL TURNING - ISO C

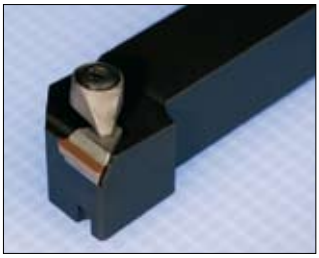

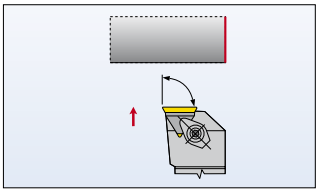

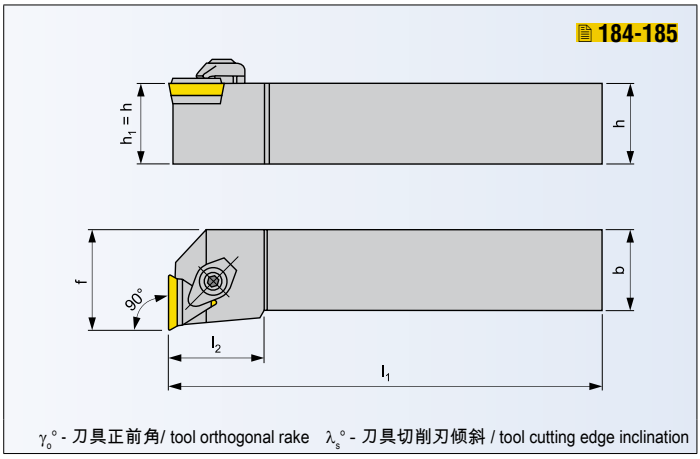

刀具，用于外圆车削 / TOOL FOR EXTERNAL TURNING

ISO	R/L	尺寸 / Dimensions [mm]										kg	备件 Spare parts	刀片 Inserts
		h=h1	b	f	l1	l2max				λs°	γo°			
CTFPR/L 2020 K 16	○ / ○	20	20	25	125	32				0	+5	0.40	CTP2	TP.. 1603..
CTFPR/L 2525 M 16	● / ○	25	25	32	150	32				0	+5	0.75	CTP2	TP.. 1603..
CTFPR/L 3225 P 16	○ / ○	32	25	32	170	32				0	+5	1.10	CTP2	TP.. 1603..
CTFPR/L 3232 P 22	○ / ○	32	32	40	170	36				0	+5	1.40	CTP3	TP.. 2204..
CTFPR/L 4040 R 22	○ / ○	40	40	50	200	36				0	+5	2.40	CTP3	TP.. 2204..

备件 / SPARE PARTS

类型 Type	断屑器 Chip breaker				刀垫 Shim	管形铆钉 Tubular rivet	压板 Clamp	夹紧螺钉 Clamp. Screw	扳手 Key	螺丝刀 Screwdriver
CTP2	TU 161202	1.2	TU 162502	2.5	TPN 160304	NT 03	UP 21	SR 04	HXK 4	-
CTP3	TU 221602	1.6	TU 223202	3.2	TPN 220304	NT 03	UP 21	SR 04	HXK 4	-

● 标准库存产品 / Stock Assortment ○ 非标准库存产品 / Non-stock Assortment 所有尺寸 / All dimensions [mm]

CSKPR/L

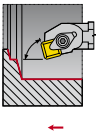

13

CTFPR/L

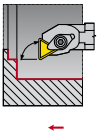

14

CTGPR/L

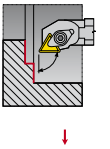

15

CSKPR/L

内孔车削 - ISO C
INTERNAL TURNING - ISO C

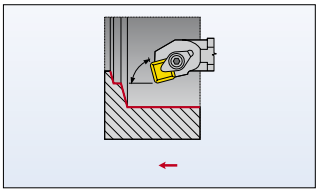

177-178

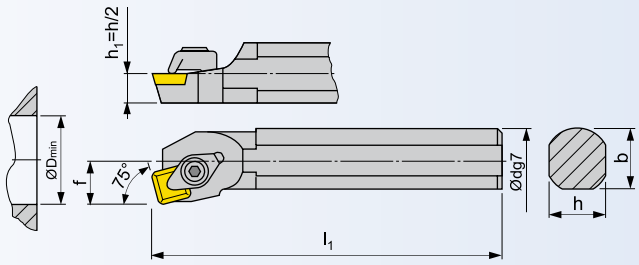

γ_o° - 刀具正前角/ tool orthogonal rake λ_s° - 刀具切削刃倾斜 / tool cutting edge inclination

刀具，用于内孔车削 / TOOL FOR INTERNAL TURNING

ISO	R/L	尺寸 / Dimensions [mm]										kg	备件 Spare parts	刀片 Inserts
		Ødg7	f	l_1	h	b	$ØD_{min}$			λ_s°	γ_o°			
S20Q-CSKPR/L 09	● / ○	20	13	180	18	18.5	25			0	0	0.45	CO1	SP.. 0903..
S25T-CSKPR/L 12	● / ○	25	17	300	23	23	32			0	0	1.15	CO2	SP.. 1203..
S32U-CSKPR/L 12	● / ○	32	22	350	30	30	40			0	0	2.10	CO2	SP.. 1203..

备件 / SPARE PARTS

类型 Type	压板 Clamp	夹紧螺钉 Clamp. Screw	扳手 Key	螺丝刀 Screwdriver		
CO1	UP 20	US 48 (M4x12.0)	-	SDR T15		
CO2	UP 21	SR 04	HXK 4	-		

● 标准库存产品 / Stock Assortiment ○ 非标准库存产品 / Non-stock Assortiment 所有尺寸 / All dimensions [mm]

CTFPR/L

内孔车削 - ISO C
INTERNAL TURNING - ISO C

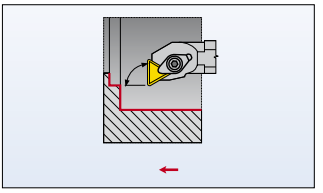

184-185

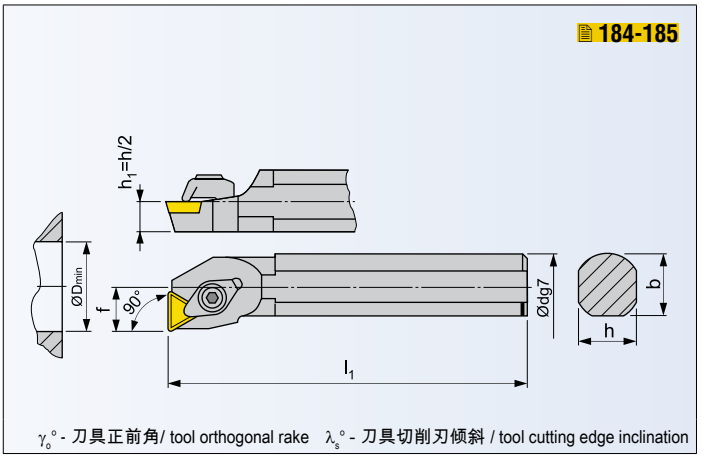

刀具，用于内孔车削 / TOOL FOR INTERNAL TURNING

ISO	R/L	尺寸 / Dimensions [mm] Ødg7	f	l_1	h	b	$ØD_{min}$			$\lambda_s°$	$\gamma_o°$	kg	备件 Spare parts	刀片 Inserts
S16M-CTFPR/L 11	● / ○	16	11	150	14.5	15	20			0	0	0.25	CO1	TP.. 1103..
S20Q-CTFPR/L 11	● / ○	20	13	180	18	18.5	25			0	0	0.45	CO1	TP.. 1103..
S25T-CTFPR/L 16	● / ○	25	17	300	23	23	32			0	0	1.15	CO2	TP.. 1603..
S32U-CTFPR/L 16	● / ○	32	22	350	30	30	40			0	0	2.10	CO2	TP.. 1603..

备件 / SPARE PARTS

类型 Type	压板 Clamp	夹紧螺钉 Clamp. Screw	扳手 Key	螺丝刀 Screwdriver		
CO1	UP 20	US 48 (M4x12.0)	-	SDR T15		
CO2	UP 21	SR 04	HXK 4	-		

● 标准库存产品 / Stock Assortment ○ 非标准库存产品 / Non-stock Assortment

所有尺寸 / All dimensions [mm]

PRAMET

CTGPR/L

内孔车削 - ISO C
INTERNAL TURNING - ISO C

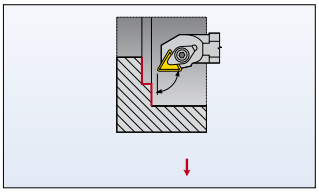

184-185

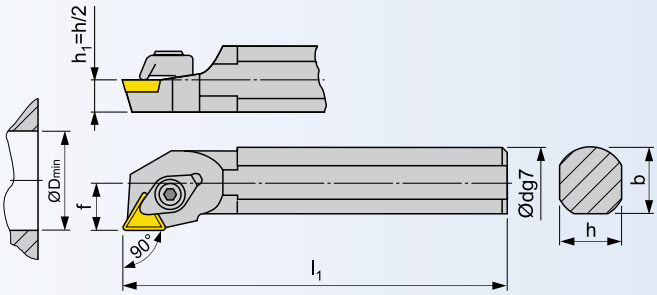

$\gamma_o°$ - 刀具正前角/ tool orthogonal rake $\lambda_s°$ - 刀具切削刃倾斜 / tool cutting edge inclination

刀具，用于内孔车削 / TOOL FOR INTERNAL TURNING

ISO	R/L	尺寸 / Dimensions [mm]										kg	备件 Spare parts	刀片 Inserts
		Ødg7	f	l_1	h	b	$ØD_{min}$			$\lambda_s°$	$\gamma_o°$			
S20Q-CTGPR/L 11	● / ○	20	13	180	18	18.5	25			0	0	0.45	CO1	TP.. 1103..
S25T-CTGPR/L 16	● / ○	25	17	300	23	23	32			0	0	1.15	CO2	TP.. 1603..
S32U-CTGPR/L 16	○ / ○	32	22	350	30	30	40			0	0	2.10	CO2	TP.. 1603..

备件 / SPARE PARTS

类型 Type	压板 Clamp	夹紧螺钉 Clamp. Screw	扳手 Key	螺丝刀 Screwdriver		
CO1	UP 20	US 48 (M4x12.0)	-	SDR T15		
CO2	UP 21	SR 04	HXK 4	-		

● 标准库存产品 / Stock Assortiment ○ 非标准库存产品 / Non-stock Assortiment 所有尺寸 / All dimensions [mm]

DCLNR/L

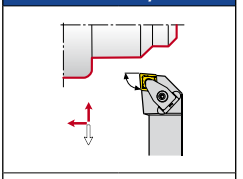

17

DDJNR/L

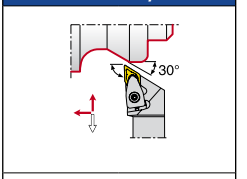

18

DSBNR/L

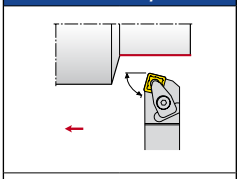

19

DTGNR/L

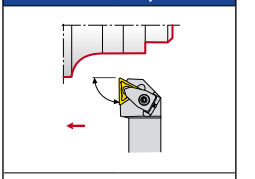

20

DWLNR/L

21

DCLNR/L

外圆车削 - ISO D
EXTERNAL TURNING - ISO D

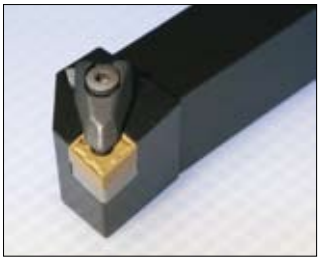

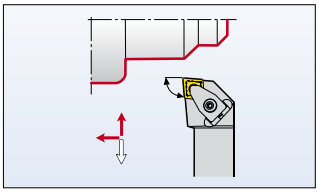

151-155, 227

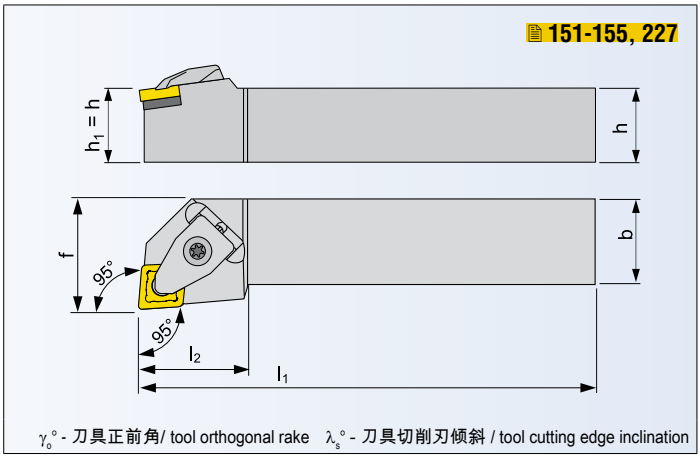

γ_o° - 刀具正前角/ tool orthogonal rake λ_s° - 刀具切削刃倾斜 / tool cutting edge inclination

刀具，用于外圆车削 - TOOL FOR EXTERNAL TURNING

ISO	R/L	尺寸 / Dimensions [mm]										kg	备件 Spare parts	刀片 Inserts
		$h=h_1$	b	f	l_1	l_{2max}				λ_s°	γ_o°			
DCLNR/L 1616 H 09	●/○	16	16	20	100	25				-6	-6	0.20	DC09	CNM. 0903..-E
DCLNR/L 2020 K 09	○/○	20	20	25	125	25				-6	-6	0.40	DC09	CNM. 0903..-E
DCLNR/L 2525 M 09	○/○	25	25	32	150	25				-6	-6	0.70	DC09	CNM. 0903..-E
DCLNR/L 2020 K 12	●/●	20	20	25	125	30				-6	-6	0.40	DC12	CNM. 1204..-E
DCLNR/L 2525 M 12	●/●	25	25	32	150	30				-6	-6	0.70	DC12	CNM. 1204..-E
DCLNR/L 3225 P 12	●/●	32	25	32	170	30				-6	-6	1.00	DC12	CNM. 1204..-E
DCLNR/L 3225 P 16	●/●	32	25	32	170	35				-6	-6	1.00	DC16	CNM. 1606..-E
DCLNR/L 3232 P 19	●/●	32	32	40	170	40				-6	-6	1.30	DC19	CNM. 1906..-E
DCLNR/L 4040 R 19	●/●	40	40	50	200	40				-6	-6	2.40	DC19	CNM. 1906..-E

备件 / SPARE PARTS

类型 Type	刀垫 Shim	刀垫螺钉 Shim screw	压板 Clamp	夹紧螺钉 Clamp. Screw	弹簧 Spring	螺丝刀 Screwdriver
DC09	DCN 090412	MSD 5008-T09P	UD 09	SR 85017-T09P	PR 6912	SDR T09P
DC12	DCN 120612	MSD 6312-T15P	UD 12	SR 85020-T15P	PR 7616	SDR T15P
DC16	DCN 160412	MSD 8015-T20P	UD 16	SR 86025-T20P	PR 9118	SDR T20P
DC19	DCN 190412	MSD 1015-T20P	UD 19	SR 86025-T20P	PR 9118	SDR T20P

● 标准库存产品 / Stock Assortiment ○ 非标准库存产品 / Non-stock Assortiment 所有尺寸 / All dimensions [mm]

DDJNR/L

外圆车削 - ISO D
EXTERNAL TURNING - ISO D

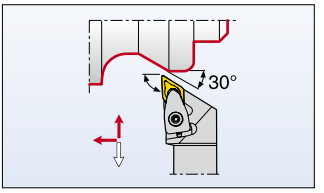

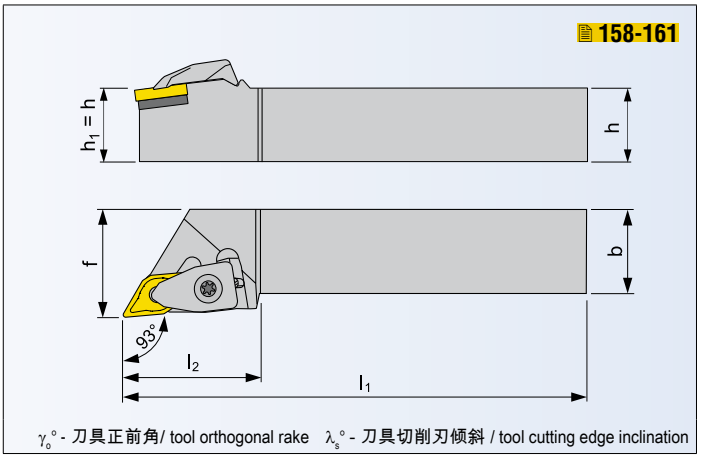

刀具，用于外圆车削 - TOOL FOR EXTERNAL TURNING

ISO	R/L	尺寸 / Dimensions [mm]										kg	备件 Spare parts	刀片 Inserts
		$h=h_1$	b	f	l_1	l_{2max}				$\lambda_s°$	$\gamma_o°$			
DDJNR/L 2020 K 11	● / ●	20	20	25	125	35				-6	-6	0.40	DD11	DNM. 1104..-E
DDJNR/L 2020 K 15	● / ●	20	20	25	125	40				-6	-6	0.40	DD15	DNM. 1506..-E
DDJNR/L 2525 M 11	● / ●	25	25	32	150	35				-6	-6	0.70	DD11	DNM. 1104..-E
DDJNR/L 2525 M 15	● / ●	25	25	32	150	40				-6	-6	0.70	DD15	DNM. 1506..-E
DDJNR/L 3225 P 15	● / ●	32	25	32	170	40				-6	-6	1.00	DD15	DNM. 1506..-E

备件 / SPARE PARTS

类型 Type	刀垫 Shim	刀垫螺钉 Shim screw	压板 Clamp	夹紧螺钉 Clamp. Screw	弹簧 Spring	螺丝刀 Screwdriver
DD11	DDN 110312	MSD 5008-T09P	UD 09	SR 85017-T09P	PR 6912	SDR T09P
DD15	DDN 150412	MSD 6312-T15P	UD 12	SR 85020-T15P	PR 7616	SDR T15P

● 标准库存产品 / Stock Assortiment　　○ 非标准库存产品 / Non-stock Assortiment　　所有尺寸 / All dimensions [mm]

PRAMET

DSBNR/L

外圆车削 - ISO D
EXTERNAL TURNING - ISO D

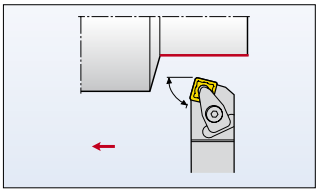

173-176

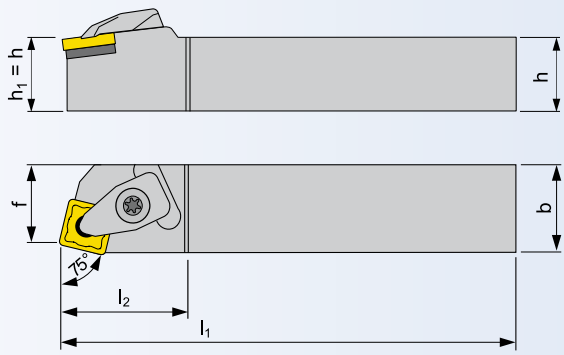

γ_o° - 刀具正前角/ tool orthogonal rake λ_s° - 刀具切削刃倾斜 / tool cutting edge inclination

刀具，用于外圆车削 - TOOL FOR EXTERNAL TURNING

ISO	R/L	尺寸 / Dimensions [mm]										kg	备件 Spare parts	刀片 Inserts
		$h=h_1$	b	f	l_1	l_{2max}				λ_s°	γ_o°			
DSBNR/L 2525 M 12	● / ○	25	25	22	150	35				-6	-6	0.70	DS12	SNM. 1204..-E
DSBNR/L 3225 P 15	● / ○	32	25	22	170	40				-6	-6	1.00	DS15	SNM. 1506..-E
DSBNR/L 3232 P 19	● / ●	32	32	27	170	45				-6	-6	1.30	DS19	SNM. 1906..-E
DSBNR/L 4040 R 19	○ / ○	40	40	35	200	45				-6	-6	2.40	DS19	SNM. 1906..-E

备件 / SPARE PARTS

类型 Type	刀垫 Shim	刀垫螺钉 Shim screw	压板 Clamp	夹紧螺钉 Clamp. Screw	弹簧 Spring	螺丝刀 Screwdriver
DS12	DSN 120612	MSD 6312-T15P	UD 12	SR 85020-T15P	PR 7616	SDR T15P
DS15	DSN 150412	MSD 8015-T20P	UD 16	SR 86025-T20P	PR 9118	SDR T20P
DS19	DSN 190412	MSD 1015-T20P	UD 19	SR 86025-T20P	PR 9118	SDR T20P

● 标准库存产品 / Stock Assortment ○ 非标准库存产品 / Non-stock Assortment 所有尺寸 / All dimensions [mm]

DTGNR/L

外圆车削 - ISO D
EXTERNAL TURNING - ISO D

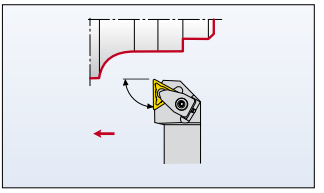

181-183

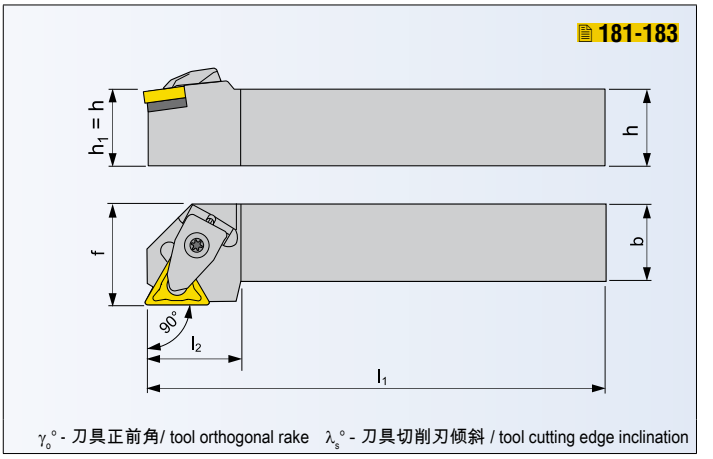

γ_o° - 刀具正前角/ tool orthogonal rake λ_s° - 刀具切削刃倾斜 / tool cutting edge inclination

刀具，用于外圆车削 - TOOL FOR EXTERNAL TURNING

ISO	R/L	尺寸 / Dimensions [mm]										kg	备件 Spare parts	刀片 Inserts
		$h=h_1$	b	f	l_1	l_{2max}				λ_s°	γ_o°			
DTGNR/L 2020 K 16	● / ○	20	20	25	125	25				-6	-6	0.40	DT16	TNM. 1604..-E
DTGNR/L 2525 M 16	● / ○	25	25	32	150	25				-6	-6	0.70	DT16	TNM. 1604..-E
DTGNR/L 2525 M 22	○ / ○	25	25	32	150	30				-6	-6	0.70	DT22	TNM. 2204..-E
DTGNR/L 3225 P 22	● / ○	32	25	32	170	30				-6	-6	1.00	DT22	TNM. 2204..-E

备件 / SPARE PARTS

类型 Type	刀垫 Shim	刀垫螺钉 Shim screw	压板 Clamp	夹紧螺钉 Clamp. Screw	弹簧 Spring	螺丝刀 Screwdriver
DT16	DTN 160312	MSD 5008-T09P	UD 09	SR 85017-T09P	PR 6912	SDR T09P
DT22	DTN 220612	MSD 6312-T15P	UD 12	SR 85020-T15P	PR 7616	SDR T15P

● 标准库存产品 / Stock Assortiment ○ 非标准库存产品 / Non-stock Assortiment 所有尺寸 / All dimensions [mm]

PRAMET

DWLNR/L

外圆车削 - ISO D
EXTERNAL TURNING - ISO D

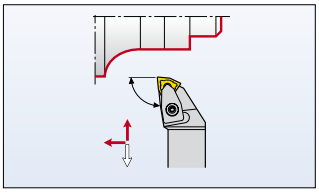

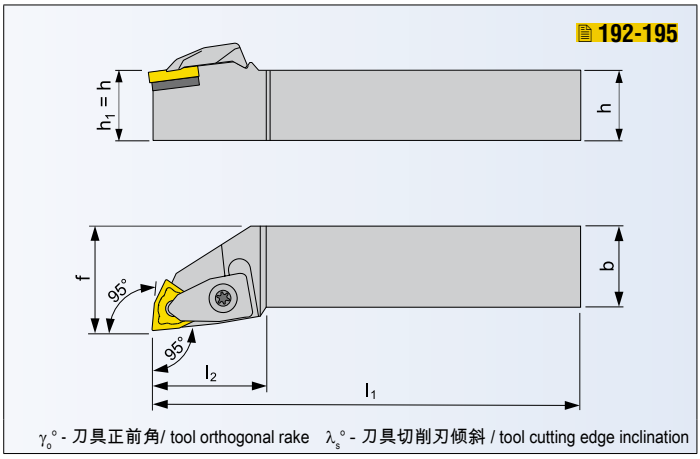

刀具，用于外圆车削 - TOOL FOR EXTERNAL TURNING

ISO	R/L	尺寸 / Dimensions [mm]										kg	备件 Spare parts	刀片 Inserts
		$h=h_1$	b	f	l_1	l_{2max}				$\lambda_s°$	$\gamma_o°$			
DWLNR/L 2020 K 08	● / ●	20	20	25	125	35				-6	-6	0.40	DW08	WNM. 0804..-E
DWLNR/L 2525 M 08	● / ●	25	25	32	150	35				-6	-6	0.70	DW08	WNM. 0804..-E
DWLNR/L 3225 P 08	● / ●	32	25	32	170	35				-6	-6	1.00	DW08	WNM. 0804..-E
DWLNR/L 3225 P 10	● / ○	32	25	32	170	36				-6	-6	1.00	DW10	WNM. 1006..-E
DWLNR/L 3232 P 13	● / ○	32	32	40	170	40				-6	-6	1.30	DW13	WNM. 1306..-E
DWLNR/L 4040 S 13	● / ○	40	40	50	250	40				-6	-6	3.10	DW13	WNM. 1306..-E

备件 / SPARE PARTS

类型 Type	刀垫 Shim	刀垫螺钉 Shim screw	压板 Clamp	夹紧螺钉 Clamp. Screw	弹簧 Spring	螺丝刀 Screwdriver
DW08	DWN 080416	US 4008-T15P	UD 12	SR 85020-T15P	PR 7616	SDR T15P
DW10	DWN 100612	US 5018-T20P	UD 16	SR 86025-T20P	PR 9118	SDR T20P
DW13	DWN 130612	US 6013-T20P	UD 19	SR 86025-T20P	PR 9118	SDR T20P

● 标准库存产品 / Stock Assortiment ○ 非标准库存产品 / Non-stock Assortiment 所有尺寸 / All dimensions [mm]

DCLNR/L

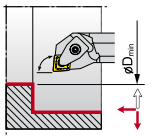

23

DTFNR/L

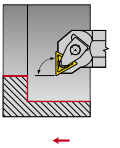

24

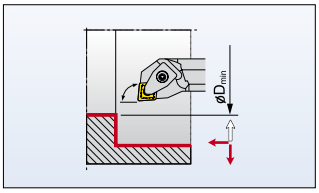

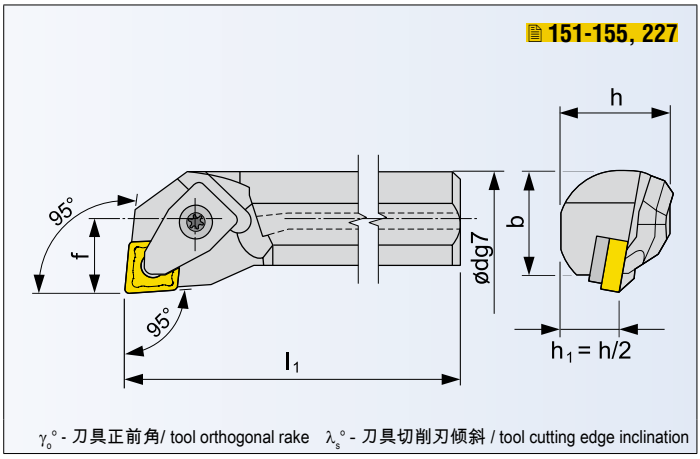

刀具，用于内孔车削 / TOOL FOR INTERNAL TURNING

ISO	R/L	尺寸 / Dimensions [mm]										kg	备件 Spare parts	刀片 Inserts
		dg7	f	l_1	h	b	D_{min}			$\lambda_s°$	$\gamma_o°$			
A25T-DCLNR/L 09	○ / ○	25	17	300	23	23	32			-11	-6	1.10	DCI09	CNM. 0903..
A25T-DCLNR/L 12	● / ●	25	17	300	23	23	32			-11	-6	1.10	DCI12	CNM. 1204..
A32U-DCLNR/L 12	● / ●	32	22	350	30	30	40			-11	-6	2.10	DCI12	CNM. 1204..
A40V-DCLNR/L 12	● / ●	40	27	400	38	38	50			-14	-6	3.60	DC12	CNM. 1204..

备件 / SPARE PARTS

类型 Type	刀垫 Shim	刀垫螺钉 Shim screw	压板 Clamp	夹紧螺钉 Clamp. Screw	弹簧 Spring	螺丝刀 Screwdriver
DCI09	DCI 090308	US 3007-T09P	UD 09	SR 85017-T09P	PR 6912	SDR T09P
DCI12	DCI 120310	US 4008-T15P	UD 12	SR 85020-T15P	PR 7616	SDR T15P
DC12	DCN 120612	MSD 6312-T15P	UD 12	SR 85020-T15P	PR 7616	SDR T15P

● 标准库存产品 / Stock Assortiment ○ 非标准库存产品 / Non-stock Assortiment 所有尺寸 / All dimensions [mm]

DTFNR/L

内孔车削 - ISO D
INTERNAL TURNING - ISO D

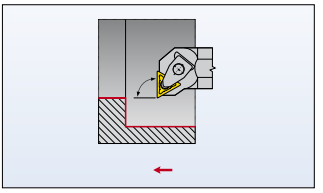

181-183

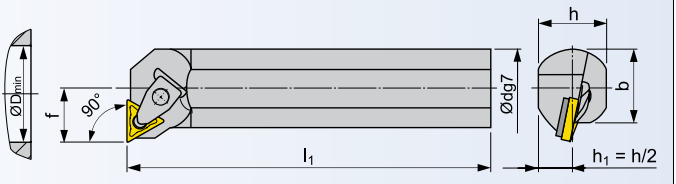

γ_o° - 刀具正前角/ tool orthogonal rake λ_s° - 刀具切削刃倾斜 / tool cutting edge inclination

刀具，用于内孔车削 / TOOL FOR INTERNAL TURNING

ISO	R/L	尺寸 / Dimensions [mm]										kg	备件 Spare parts	刀片 Inserts
		dg7	f	l_1	h	b	D_{min}			λ_s°	γ_o°			
A32U-DTFNR/L 16	○ / ○	32	22	350	30	30	40			-12	-6	2.10	DT16	TNM. 1604..-E

备件 / SPARE PARTS

类型 Type	刀垫 Shim	刀垫螺钉 Shim screw	压板 Clamp	夹紧螺钉 Clamp. Screw	弹簧 Spring	螺丝刀 Screwdriver
DT16	DTN 160312	MSD 5008-T09P	UD 09	SR 85017-T09P	PR 6912	SDR T09P

● 标准库存产品 / Stock Assortiment ○ 非标准库存产品 / Non-stock Assortiment 所有尺寸 / All dimensions [mm]

PRAMET

MTJNR/L

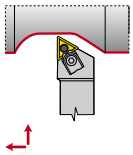

26

MVJNR/L

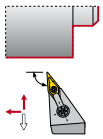

27

MWLNR/L

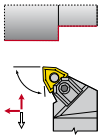

28

MTJNR/L

外圆车削 - ISO M
EXTERNAL TURNING - ISO M

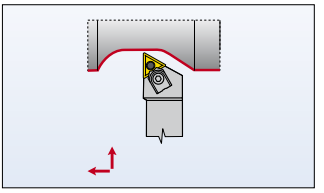

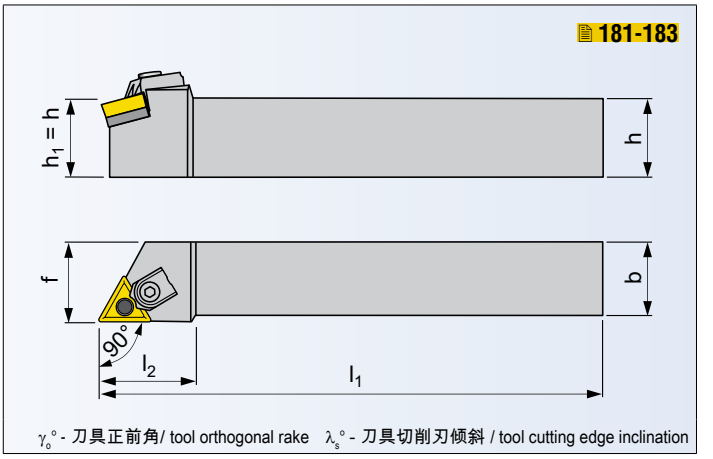

刀具，用于外圆车削 / TOOL FOR EXTERNAL TURNING

ISO	R/L	尺寸 / Dimensions [mm]										kg	备件 Spare parts	刀片 Inserts
		h=h1	b	f	l1	l2max				λs°	γo°			
MTJNR/L 2020 K 16	● / ●	20	20	25	125	34				-6	-6	0.45	MT16	TNM. 1604..-E
MTJNR/L 2525 M 16	● / ●	25	25	32	150	34				-6	-6	0.80	MT16	TNM. 1604..-E
MTJNR/L 3232 P 22	● / ●	32	32	40	175	42				-6	-6	1.40	MT22	TNM. 2204..-E

备件 / SPARE PARTS

类型 Type	夹紧元件 Clamping element	刀垫 Shim	夹紧销 Clamping pin	螺钉 Screw	扳手 Key	
MT16	UE 16	MTN 160312	UC 52	HS 93	HXK 5	
MT22	UE 22	MTN 220612	UC 53	HS 94	HXK 5	

● 标准库存产品 / Stock Assortiment ○ 非标准库存产品 / Non-stock Assortiment 所有尺寸 / All dimensions [mm]

PRAMET

MVJNR/L

外圆车削 - ISO M
EXTERNAL TURNING - ISO M

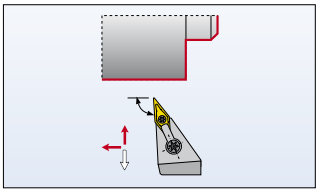

189

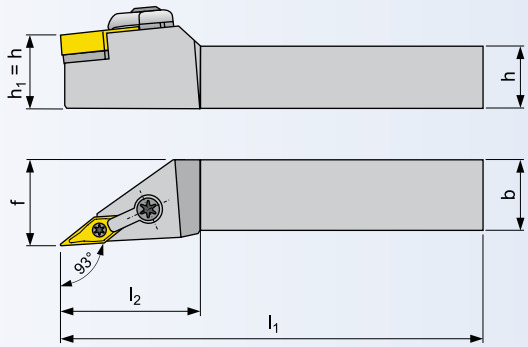

γ_o° - 刀具正前角/ tool orthogonal rake λ_s° - 刀具切削刃倾斜 / tool cutting edge inclination

刀具，用于外圆车削 / TOOL FOR EXTERNAL TURNING

ISO	R/L	尺寸 / Dimensions [mm]										kg	备件 Spare parts	刀片 Inserts
		$h=h_1$	b	f	l_1	l_{2max}				λ_s°	γ_o°			
MVJNR/L 2020 K 16-A	● / ●	20	20	25	125	41				-4.5	-13.5	0.45	MV2	VNM. 1604..
MVJNR/L 2525 M 16-A	● / ●	25	25	32	150	41				-4.5	-13.5	0.70	MV2	VNM. 1604..
MVJNR/L 3225 P 16-A	● / ●	32	25	32	170	41				-4.5	-13.5	1.00	MV2	VNM. 1604..

备件 / SPARE PARTS

类型 Type	刀垫 Shim	压板 Clamp	夹紧销 Clamping pin	螺钉 Screw	扳手 Key	螺丝刀 Screwdriver
MV2	MVN 160316	UPC 22	UP 0909-T09P	PS 6026-T09P	-	SDR T09P

● 标准库存产品 / Stock Assortment ○ 非标准库存产品 / Non-stock Assortment 所有尺寸 / All dimensions [mm]

MWLNR/L

外圆车削 - ISO M
EXTERNAL TURNING - ISO M

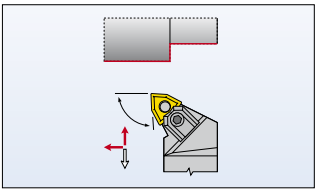

192-195

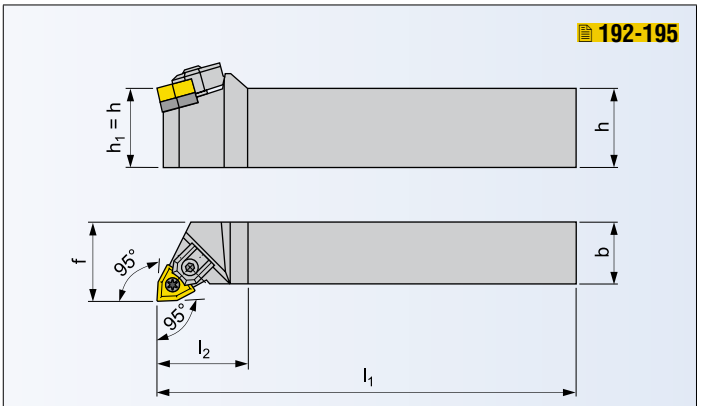

γ_o° - 刀具正前角/ tool orthogonal rake λ_s° - 刀具切削刃倾斜 / tool cutting edge inclination

刀具，用于外圆车削 / TOOL FOR EXTERNAL TURNING

ISO	R/L	尺寸 / Dimensions [mm]										kg	备件 Spare parts	刀片 Inserts
		h	b	f	l_1	l_{2max}				λ_s°	γ_o°			
MWLNR/L 2525 M 08	● / ●	25	25	32	150	32				-6	-6	0.70	MW1	WNM. 0804..
MWLNR/L 3225 P 08	● / ●	32	25	32	170	32				-6	-6	1.00	MW1	WNM. 0804..
MWLNR/L 4040 R 08	● / ●	40	40	50	200	32				-6	-6	2.50	MW1	WNM. 0804..

备件 / SPARE PARTS

类型 Type	夹紧元件 Clamping element	刀垫 Shim	夹紧销 Clamping pin	螺钉 Screw	扳手 Key	
MW1	UE 05	WNW 080412	UC 51	HS 0408	HXK 3	

● 标准库存产品 / Stock Assortiment ○ 非标准库存产品 / Non-stock Assortiment 所有尺寸 / All dimensions [mm]

PRAMET

PCBNR/L

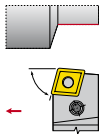

30

PCKNR/L

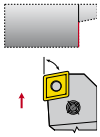

31

PCLNR/L

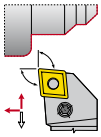

32

PDJNR/L

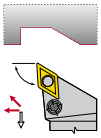

33

PDNNR/L

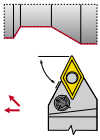

34

PDXNR/L

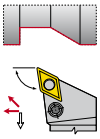

35

PLBNR/L

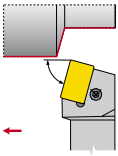

36

PRDCN

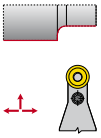

37

PRSCR/L

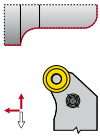

38

PRSNR/L

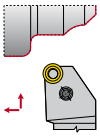

39

PSBNR/L

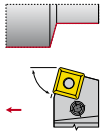

40

PSDNN

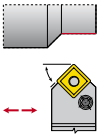

41

PSKNR/L

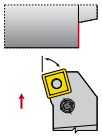

42

PSSNR/L

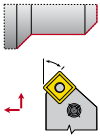

43

PTFNR/L

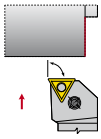

44

PTGNR/L

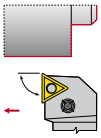

45

PTTNR/L

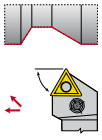

46

PWLNR/L

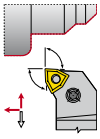

47

PCBNR/L

外圆车削 - ISO P
EXTERNAL TURNING - ISO P

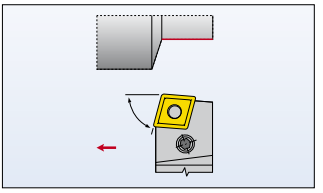

151-155, 227

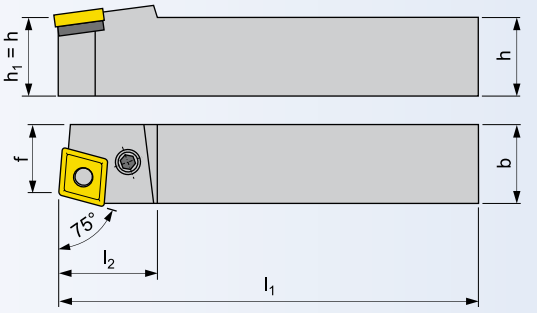

γ_o° - 刀具正前角/ tool orthogonal rake λ_s° - 刀具切削刃倾斜 / tool cutting edge inclination

刀具，用于外圆车削 / TOOL FOR EXTERNAL TURNING

ISO	R/L	尺寸 / Dimensions [mm]										kg	备件 Spare parts	刀片 Inserts
		$h=h_1$	b	f	l_1	l_{2max}				λ_s°	γ_o°			
PCBNR/L 2020 K 12	●/●	20	20	17	125	36				-6	-6	0.38	PC22	CNM. 1204..E
PCBNR/L 2525 M 12	●/●	25	25	22	150	36				-6	-6	0.63	PC20	CNM. 1204..E
PCBNR/L 3225 P 12	●/●	32	25	22	170	36				-6	-6	0.70	PC20	CNM. 1204..E
PCBNR/L 3232 P 16	●/●	32	32	27	170	40				-6	-6	1.25	PC40	CNM. 1606..E
PCBNR/L 3232 P 19	●/●	32	32	27	170	45				-6	-6	1.25	PC50	CNM. 1906..E
PCBNR/L 4040 S 19	●/●	40	40	35	250	45				-6	-6	3.10	PC50	CNM. 1906..E
PCBNR/L 4040 S 25	●/●	40	40	35	250	45				-6	-6	3.20	PC60	CNM. 2509..E
PCBNR/L 5050 T 25	●/●	50	50	43	300	50				-6	-6	5.80	PC60	CNM. 2509..E

备件 / SPARE PARTS

类型 Type	刀垫 Shim	夹紧杠杆 Clamping lever	夹紧螺钉 Clamp. Screw	管形铆钉 Tubular rivet	安装锥形塞 Mount. taper plug	扳手 Key
PC20	CNU 120312	PU 02	US 35 (M8x22.5)	NT 05	MT 05	HXK 4
PC22	CNU 120312	PU 02	US 42 (M8x21.0)	NT 05	MT 05	HXK 4
PC40	CNU 150312	PU 04	US 36 (M8x26.0)	NT 07	MT 07	HXK 4
PC50	CNU 190416	PU 05	US 38 (M10x29.0)	NT 06	MT 06	HXK 5
PC60	CNU 250620	PU 06	US 39 (M10x33.0)	NT 08	MT 08	HXK 5

● 标准库存产品 / Stock Assortment ○ 非标准库存产品 / Non-stock Assortment 所有尺寸 / All dimensions [mm]

PRAMET

PCKNR/L

外圆车削 - ISO P
EXTERNAL TURNING - ISO P

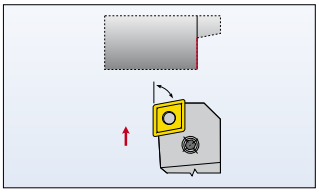

151-155, 227

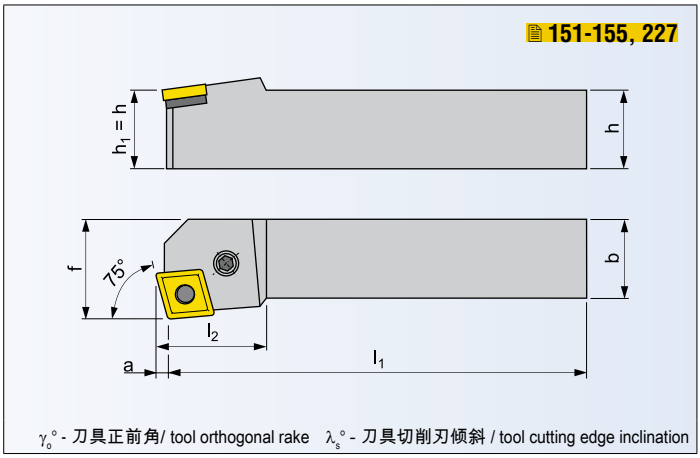

γ_o° - 刀具正前角/ tool orthogonal rake λ_s° - 刀具切削刃倾斜 / tool cutting edge inclination

刀具，用于外圆车削 / TOOL FOR EXTERNAL TURNING

ISO	R/L	尺寸 / Dimensions [mm]										kg	备件 Spare parts	刀片 Inserts
		$h=h_1$	b	f	l_1	l_{2max}	a			λ_s°	γ_o°			
PCKNR/L 2020 K 12	● / ○	20	20	25	125	36	3.1			-6	-6	0.42	PC22	CNM. 1204..-E
PCKNR/L 2525 M 12	● / ●	25	25	32	150	36	3.1			-6	-6	0.68	PC20	CNM. 1204..-E
PCKNR/L 3225 P 12	● / ○	32	25	32	170	36	3.1			-6	-6	0.85	PC20	CNM. 1204..-E
PCKNR/L 3232 P 16	● / ●	32	32	40	170	40	3.9			-6	-6	1.40	PC40	CNM. 1606..-E
PCKNR/L 3232 P 19	● / ●	32	32	40	170	45	4.6			-6	-6	1.40	PC50	CNM. 1906..-E
PCKNR/L 4040 S 19	● / ●	40	40	50	250	45	4.6			-6	-6	3.25	PC50	CNM. 1906..-E

备件 / SPARE PARTS

类型 Type	刀垫 Shim	夹紧杠杆 Clamping lever	夹紧螺钉 Clamp. Screw	管形铆钉 Tubular rivet	安装锥形塞 Mount. taper plug	扳手 Key
PC20	CNU 120312	PU 02	US 35 (M8x22.5)	NT 05	MT 05	HXK 4
PC22	CNU 120312	PU 02	US 42 (M8x21.0)	NT 05	MT 05	HXK 4
PC40	CNU 150312	PU 04	US 36 (M8x26.0)	NT 07	MT 07	HXK 4
PC50	CNU 190416	PU 05	US 38 (M10x29.0)	NT 06	MT 06	HXK 5

● 标准库存产品 / Stock Assortment ○ 非标准库存产品 / Non-stock Assortment 所有尺寸 / All dimensions [mm]

PCLNR/L

外圆车削 - ISO P
EXTERNAL TURNING - ISO P

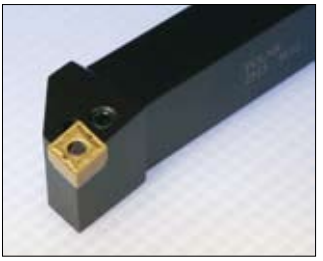

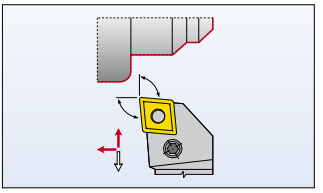

151-155. 227

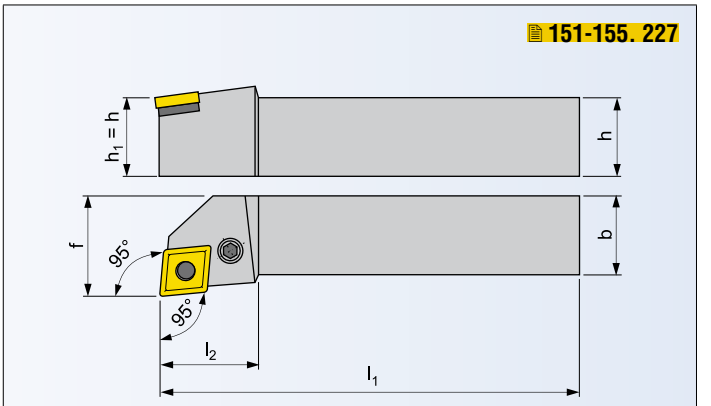

γ_o° - 刀具正前角/ tool orthogonal rake λ_s° - 刀具切削刃倾斜 / tool cutting edge inclination

刀具，用于外圆车削 / TOOL FOR EXTERNAL TURNING

ISO	R/L	尺寸 / Dimensions [mm]										kg	备件 Spare parts	刀片 Inserts
		$h=h_1$	b	f	l_1	l_{2max}				λ_s°	γ_o°			
PCLNR/L 2020 K 12	● / ●	20	20	25	125	36				-6	-6	0.42	PC22	CNM. 1204..-E
***PCLNR/L 2525 K 12-S**	● / ●	25	25	32	125	36				-6	-6	0.68	PC20	CNM. 1204..-E
PCLNR/L 2525 M 12	● / ●	25	25	32	150	36				-6	-6	0.68	PC20	CNM. 1204..-E
***PCLNR/L 3225 L 12-S**	● / ○	32	25	32	140	36				-6	-6	0.85	PC20	CNM. 1204..-E
PCLNR/L 3225 P 12	● / ●	32	25	32	170	36				-6	-6	0.85	PC20	CNM. 1204..-E
PCLNR/L 3225 P 16	● / ●	32	25	32	170	40				-6	-6	1.10	PC40	CNM. 1606..-E
PCLNR/L 3232 P 19	● / ●	32	32	40	170	45				-6	-6	1.40	PC50	CNM. 1906..-E
PCLNR/L 4040 R 19	● / ●	40	40	50	200	45				-6	-6	2.60	PC50	CNM. 1906..-E
PCLNR/L 4040 S 19	● / ●	40	40	50	250	45				-6	-6	3.15	PC50	CNM. 1906..-E
PCLNR/L 4040 S 25	● / ●	40	40	50	250	45				-6	-6	3.20	PC60	CNM. 2509..-E
PCLNR/L 5050 T 25	● / ●	50	50	60	300	50				-6	-6	5.80	PC60	CNM. 2509..-E

*) 1 个轴向螺钉 OS 2，2 个侧向螺钉 SS 02 / 1 x axial screw OS 2. 2 x side screw SS 02

备件 / SPARE PARTS

类型 Type	刀垫 Shim	夹紧杠杆 Clamping lever	夹紧螺钉 Clamp. Screw	管形铆钉 Tubular rivet	安装锥形塞 Mount. taper plug	扳手 Key
PC20	CNU 120312	PU 02	US 35 (M8x22.5)	NT 05	MT 05	HXK 4
PC22	CNU 120312	PU 02	US 42 (M8x21.0)	NT 05	MT 05	HXK 4
PC40	CNU 150312	PU 04	US 36 (M8x26.0)	NT 07	MT 07	HXK 4
PC50	CNU 190416	PU 05	US 38 (M10x29.0)	NT 06	MT 06	HXK 5
PC60	CNU 250620	PU 06	US 39 (M10x33.0)	NT 08	MT 08	HXK 5

● 标准库存产品 / Stock Assortment ○ 非标准库存产品 / Non-stock Assortment 所有尺寸 / All dimensions [mm]

PRAMET

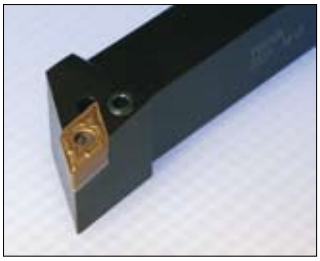

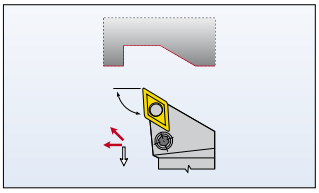

158-161

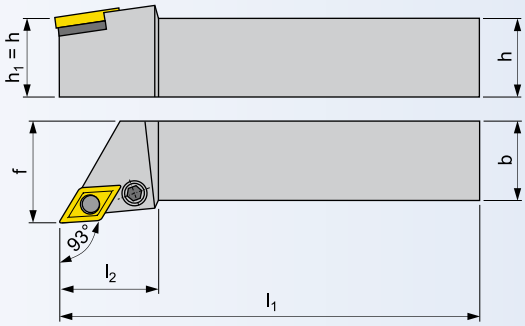

γ_o° - 刀具正前角/ tool orthogonal rake λ_s° - 刀具切削刃倾斜 / tool cutting edge inclination

刀具，用于外圆车削 / TOOL FOR EXTERNAL TURNING

ISO	R/L	尺寸 / Dimensions [mm]										kg	备件 Spare parts	刀片 Inserts
		$h=h_1$	b	f	l_1	l_{2max}				λ_s°	γ_o°			
PDJNR/L 2020 K 11	● / ●	20	20	25	125	30				-6	-6	0.44	PD60	DNM. 1104..-E
PDJNR/L 2525 M 11	● / ●	25	25	32	150	30				-6	-6	0.68	PD60	DNM. 1104..-E
PDJNR/L 3225 P 11	● / ○	32	25	32	170	30				-6	-6	0.82	PD60	DNM. 1104..-E
PDJNR/L 2020 K 15	● / ●	20	20	25	125	40				-6	-6	0.44	PD31	DNM. 1506..-E
PDJNR/L 2525 M 15	● / ●	25	25	32	150	40				-6	-6	0.68	PD30	DNM. 1506..-E
***PDJNR/L 2525 K 15-S**	● / ○	25	25	32	125	40				-6	-6	0.68	PD30	DNM. 1506..-E
PDJNR/L 3225 P 15	● / ●	32	25	32	170	40				-6	-6	0.82	PD30	DNM. 1506..-E
PDJNR/L 3232 P 15	● / ●	32	32	40	170	40				-6	-6	0.82	PD30	DNM. 1506..-E

*) 1 个轴向螺钉 OS 2，2 个侧向螺钉 SS 02 / 1 x axial screw OS 2. 2 x side screw SS 02

备件 / SPARE PARTS

类型 Type	刀垫 Shim	夹紧杠杆 Clamping lever	夹紧螺钉 Clamp. Screw	管形铆钉 Tubular rivet	安装锥形塞 Mount. taper plug	扳手 Key
PD30	DNU 150308	PU 03	US 36 (M8x26.0)	NT 05	MT 05	HXK 4
PD31	DNU 150308	PU 03	US 40 (M8x20.5)	NT 05	MT 05	HXK 4
PD60	PDN 110308	PU 3512	PS 0616	NT 5153	MT 0912	HXK 2.5

● 标准库存产品 / Stock Assortiment ○ 非标准库存产品 / Non-stock Assortiment 所有尺寸 / All dimensions [mm]

PDNNR/L

外圆车削 - ISO P
EXTERNAL TURNING - ISO P

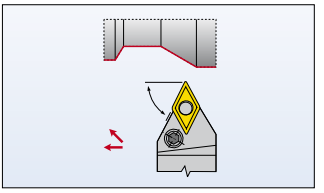

158-161

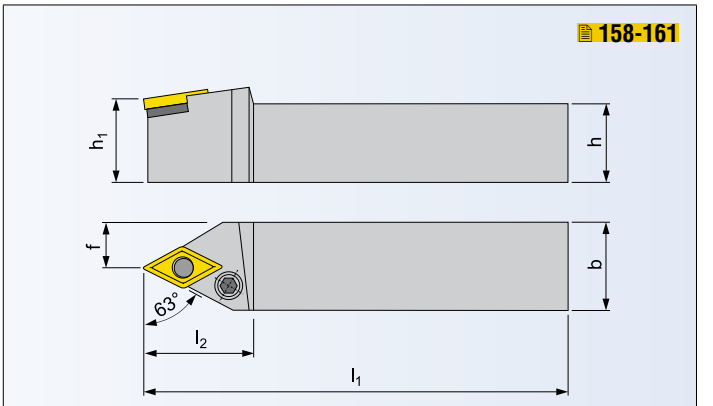

γ_o° - 刀具正前角/ tool orthogonal rake λ_s° - 刀具切削刃倾斜 / tool cutting edge inclination

刀具，用于外圆车削 / TOOL FOR EXTERNAL TURNING

ISO	R/L	尺寸 / Dimensions [mm]										kg	备件 Spare parts	刀片 Inserts
		h	h_1	b	f	l_1	l_{2max}			λ_s°	γ_o°			
PDNNR/L 2020 K 11	● / ●	20	20	20	10	125	24			-6	-6	0.44	PD60	DNM. 1104.-E
PDNNR/L 2525 M 11	● / ○	25	25	25	12.5	150	30			-6	-6	0.64	PD60	DNM. 1104.-E
PDNNR/L 2525 M 15	● / ●	25	25	25	12.5	150	40			-6	-6	0.64	PD30	DNM. 1506.-E
PDNNR/L 3225 H 15	○ / ○	32	36	25	12.5	100	40			-6	-6	0.55	PD30	DNM. 1506.-E
PDNNR/L 3225 P 15	● / ●	32	32	25	12.5	170	40			-6	-6	0.82	PD30	DNM. 1506.-E

备件 / SPARE PARTS

类型 Type	刀垫 Shim	夹紧杠杆 Clamping lever	夹紧螺钉 Clamp. Screw	管形铆钉 Tubular rivet	安装锥形塞 Mount. taper plug	扳手 Key
PD30	DNU 150308	PU 03	US 36 (M8x26.0)	NT 05	MT 05	HXK 4
PD60	PDN 110308	PU 3512	PS 0616	NT 5153	MT 0912	HXK 2.5

● 标准库存产品 / Stock Assortiment ○ 非标准库存产品 / Non-stock Assortiment 所有尺寸 / All dimensions [mm]

PRAMET

PDXNR/L

外圆车削 - ISO P
EXTERNAL TURNING - ISO P

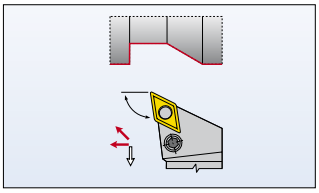

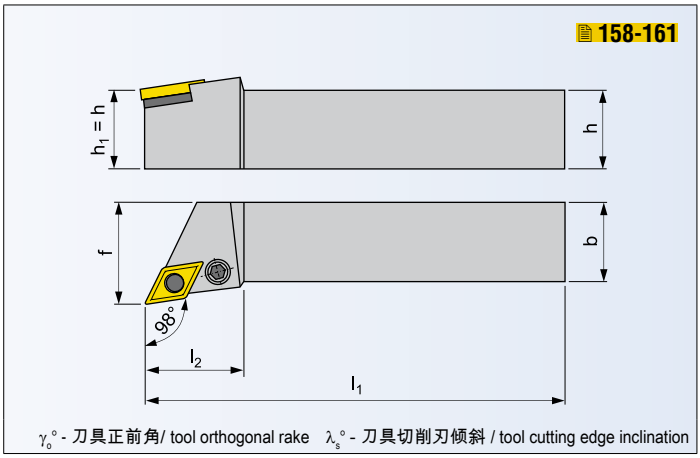

刀具，用于外圆车削 / TOOL FOR EXTERNAL TURNING

ISO	R/L	尺寸 / Dimensions [mm]										kg	备件 Spare parts	刀片 Inserts
		h=h1	b	f	l1	l2max				λs°	γo°			
PDXNR/L 2020 K 15	● / ●	20	20	25	125	40				-6	-6	0.42	PD31	DNM. 1506..-E
PDXNR/L 2525 M 15	● / ●	25	25	32	150	40				-6	-6	0.66	PD30	DNM. 1506..-E
PDXNR/L 3225 P 15	● / ●	32	25	32	170	40				-6	-6	0.80	PD30	DNM. 1506..-E

备件 / SPARE PARTS

类型 Type	刀垫 Shim	夹紧杠杆 Clamping lever	夹紧螺钉 Clamp. Screw	管形铆钉 Tubular rivet	安装锥形塞 Mount. taper plug	扳手 Key
PD30	DNU 150308	PU 03	US 36 (M8x26.0)	NT 05	MT 05	HXK 4
PD31	DNU 150308	PU 03	US 40 (M8x20.5)	NT 05	MT 05	HXK 4

● 标准库存产品 / Stock Assortment ○ 非标准库存产品 / Non-stock Assortment 所有尺寸 / All dimensions [mm]

PLBNR/L

外圆车削 - ISO P
EXTERNAL TURNING - ISO P

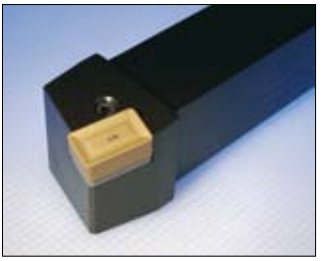

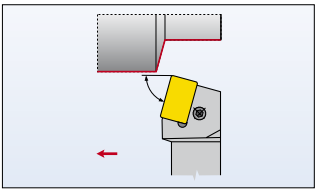

164

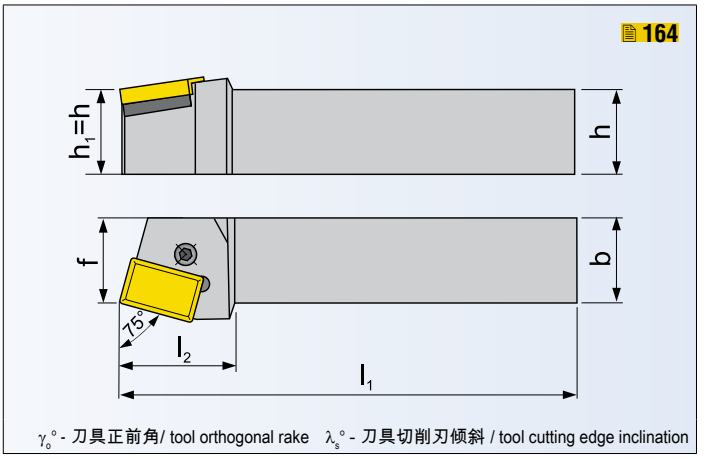

γ_o° - 刀具正前角/ tool orthogonal rake λ_s° - 刀具切削刃倾斜 / tool cutting edge inclination

刀具，用于外圆车削 / TOOL FOR EXTERNAL TURNING

ISO	R/L	尺寸 / Dimensions [mm]										kg	备件 Spare parts	刀片 Inserts
		$h=h_1$	b	f	l_1	l_{2max}				λ_s°	γ_o°			
PLBNR/L 6060 V 40-A	●/○	60	60	60	400	62				-6	-6	11.3	PL71	LNUX 40....
PLBNR/L 6060 V 50	●/○	60	60	60	400	62				-6	-6	11.3	PL72	LNUX 50....

备件 / SPARE PARTS

类型 Type	刀垫 Shim	夹紧杠杆 Clamping lever	夹紧螺钉 Clamp. Screw	管形铆钉 Tubular rivet	安装锥形塞 Mount. taper plug	扳手 Key
PL71	LNX 400632	PU 06	PS 12040 (M12x40.0)	NT 08	MT 08	HXK 5
PL72	LNX 500632	PU 06	PS 12040 (M12x40.0)	NT 08	MT 08	HXK 5

● 标准库存产品 / Stock Assortiment ○ 非标准库存产品 / Non-stock Assortiment 所有尺寸 / All dimensions [mm]

PRAMET

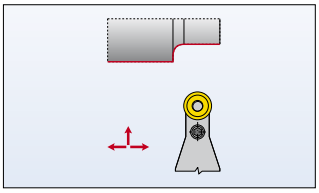

168

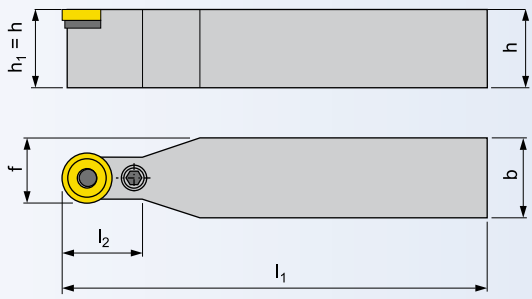

γ_o° - 刀具正前角/ tool orthogonal rake λ_s° - 刀具切削刃倾斜 / tool cutting edge inclination

刀具，用于外圆车削 / TOOL FOR EXTERNAL TURNING

ISO		尺寸 / Dimensions [mm]										kg	备件 Spare parts	刀片 Inserts
		h=h1	b	f	l1	l2max				λs°	γo°			
PRDCN 3225 P 16	●	32	25	20.5	170	32				0	0	0.80	PRP70	RCMX 1606 MO
PRDCN 3232 P 20	●	32	32	26	170	32				0	0	1.30	PRP90	RCMX 2006 MO
PRDCN 4040 S 20	○	40	40	30	250	40				0	0	3.10	PRP90	RCMX 2006 MO
PRDCN 4040 S 25	●	40	40	32.5	250	40				0	0	3.20	PRP80	RCMX 2507 MO
PRDCN 5050 S 32	○	50	50	41	250	50				0	0	3.50	PRP100	RCMX 3209 MO
PRDCN 5050 T 32	●	50	50	41	300	50				0	0	4.50	PRP100	RCMX 3209 MO

备件 / SPARE PARTS

类型 Type	刀垫 Shim	夹紧杠杆 Clamping lever	夹紧螺钉 Clamp. Screw	管形铆钉 Tubular rivet	安装锥形塞 Mount. taper plug	扳手 Key
PRP70	RCU 160300	PU 07	US 36 (M8x26.0)	NT 05	MT 05	HXK 4
PRP80	RCU 250600	PU 08	US 38 (M10x29.0)	NT 06	MT 06	HXK 5
PRP90	RCU 200400	PU 09	US 36 (M8x26.0)	NT 07	MT 07	HXK 4
PRP100	RCU 320600	PU 10	US 47 (M12x36.0)	NT 08	MT 08	HXK 5

● 标准库存产品 / Stock Assortiment ○ 非标准库存产品 / Non-stock Assortiment 所有尺寸 / All dimensions [mm]

PRSCR/L

外圆车削 - ISO P
EXTERNAL TURNING - ISO P

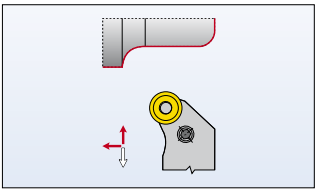

168

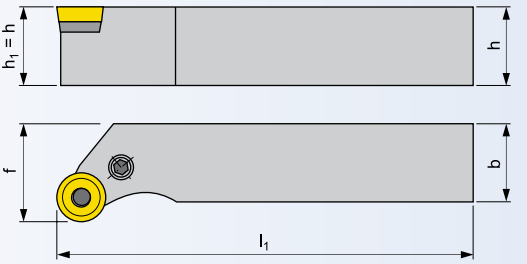

γ_o° - 刀具正前角/ tool orthogonal rake λ_s° - 刀具切削刃倾斜 / tool cutting edge inclination

刀具，用于外圆车削 / TOOL FOR EXTERNAL TURNING

ISO	R/L	尺寸 / Dimensions [mm]										kg	备件 Spare parts	刀片 Inserts
		$h=h_1$	b	f	l_1					λ_s°	γ_o°			
PRSCR/L 3225 P 16	● / ●	32	25	32	170					0	0	0.90	PRP70	RCMX 1606 MO
PRSCR/L 3232 P 20	● / ●	32	32	40	170					0	0	1.40	PRP90	RCMX 2006 MO
PRSCR/L 4040 R 16	● / ○	40	40	50	200					0	0	2.80	PRP70	RCMX 1606 MO
PRSCR/L 4040 S 25	● / ●	40	40	50	250					0	0	3.40	PRP80	RCMX 2507 MO

备件 / SPARE PARTS

类型 Type	刀垫 Shim	夹紧杠杆 Clamping lever	夹紧螺钉 Clamp. Screw	管形铆钉 Tubular rivet	安装锥形塞 Mount. taper plug	扳手 Key
PRP70	RCU 160300	PU 07	US 36 (M8x26.0)	NT 05	MT 05	HXK 4
PRP80	RCU 250600	PU 08	US 38 (M10x29.0)	NT 06	MT 06	HXK 5
PRP90	RCU 200400	PU 09	US 36 (M8x26.0)	NT 07	MT 07	HXK 4

● 标准库存产品 / Stock Assortiment ○ 非标准库存产品 / Non-stock Assortiment 所有尺寸 / All dimensions [mm]

PRAMET

PRSNR/L

外圆车削 - ISO P
EXTERNAL TURNING - ISO P

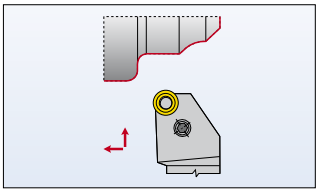

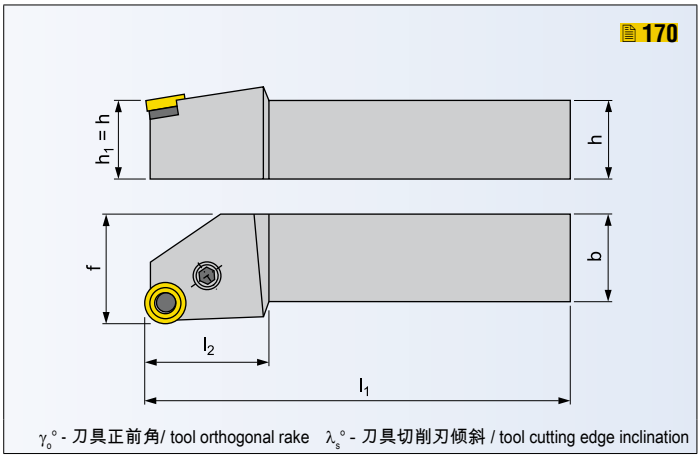

刀具，用于外圆车削 / TOOL FOR EXTERNAL TURNING

ISO	R/L	尺寸 / Dimensions [mm]										kg	备件 Spare parts	刀片 Inserts
		$h=h_1$	b	f	l_1	l_{2max}				$\lambda_s°$	$\gamma_o°$			
PRSNR/L 2525 M 12	● / ○	25	25	32	150	32				-6	-6	0.68	PR20	RNM. 120400-E
PRSNR/L 3232 P 15	○ / ○	32	32	40	170	38				-6	-6	1.40	PR40	RNM. 150600-E
PRSNR/L 4040 R 19	○ / ○	40	40	50	200	40				-6	-6	2.60	PR50	RNM. 190600-E

备件 / SPARE PARTS

类型 Type	刀垫 Shim	夹紧杠杆 Clamping lever	夹紧螺钉 Clamp. Screw	管形铆钉 Tubular rivet	安装锥形塞 Mount. taper plug	扳手 Key
PR20	RNU 120300	PU 02	US 35 (M8x22.5)	NT 05	MT 05	HXK 4
PR40	RNU 150300	PU 04	US 36 (M8x26.0)	NT 07	MT 07	HXK 4
PR50	RNU 190400	PU 05	US 38 (M10x29.0)	NT 06	MT 06	HXK 5

● 标准库存产品 / Stock Assortiment ○ 非标准库存产品 / Non-stock Assortiment 所有尺寸 / All dimensions [mm]

PSBNR/L

外圆车削 - ISO P
EXTERNAL TURNING - ISO P

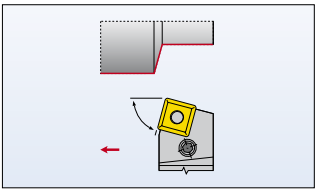

173-177

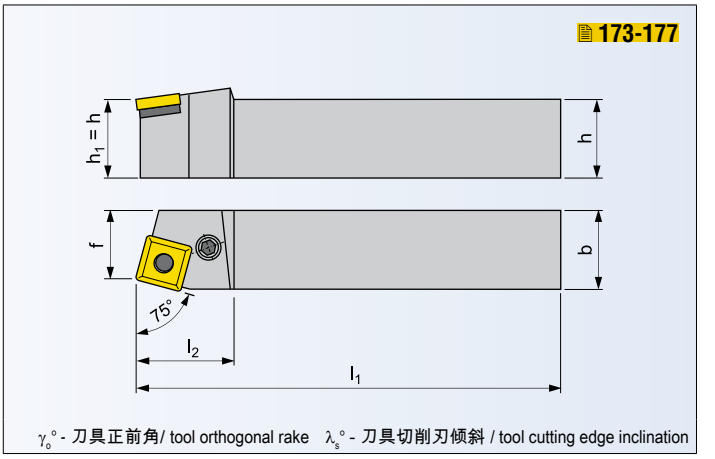

γ_o° - 刀具正前角/ tool orthogonal rake λ_s° - 刀具切削刃倾斜 / tool cutting edge inclination

刀具，用于外圆车削 / TOOL FOR EXTERNAL TURNING

ISO	R/L	尺寸 / Dimensions [mm]										kg	备件 Spare parts	刀片 Inserts
		$h=h_1$	b	f	l_1	l_{2max}				λ_s°	γ_o°			
PSBNR/L 2020 K 12	●/●	20	20	17	125	36				-6	-6	0.38	PS22	SNM. 1204..-E
PSBNR/L 2525 M 12	●/●	25	25	22	150	36				-6	-6	0.63	PS20	SNM. 1204..-E
PSBNR/L 3225 P 15	●/●	32	25	22	170	40				-6	-6	0.65	PS40	SNM. 1506..-E
PSBNR/L 3232 P 19	●/●	32	32	27	170	45				-6	-6	1.30	PS50	SNM. 1906..-E
PSBNR/L 4040 R 19	●/●	40	40	35	200	45				-6	-6	2.50	PS50	SNM. 1906..-E
PSBNR/L 4040 S 19	●/●	40	40	35	250	45				-6	-6	3.10	PS50	SNM. 1906..-E
PSBNR/L 4040 R 25	●/●	40	40	35	200	50				-6	-6	2.50	PS60	SNM. 2507..-E
PSBNR/L 4040 S 25	●/●	40	40	35	250	50				-6	-6	3.20	PS60	SNM. 2507..-E
PSBNR/L 4040 S 2509	●/●	40	40	35	250	50				-6	-6	3.20	PS70	SNM. 2509..-E
PSBNR/L 4040 S 2512-A	●/●	40	40	35	250	50				-6	-6	3.20	PS72	SNM. 2512..-E
PSBNR/L 5050 S 25	○/○	50	50	43	250	50				-6	-6	4.70	PS60	SNM. 2507..-E
PSBNR/L 5050 T 25	●/●	50	50	43	300	50				-6	-6	5.80	PS60	SNM. 2507..-E
PSBNR/L 5050 T 2509	●/○	50	50	43	300	50				-6	-6	5.80	PS70	SNM. 2509..-E
PSBNR/L 5050 T 2512-A	●/●	50	50	43	300	50				-6	-6	5.80	PS72	SNM. 2512..-E

备件 / SPARE PARTS

类型 Type	刀垫 Shim	夹紧杠杆 Clamping lever	夹紧螺钉 Clamp. Screw	管形铆钉 Tubular rivet	安装锥形塞 Mount. taper plug	扳手 Key
PS20	SNU 120312	PU 02	US 35 (M8x22.5)	NT 05	MT 05	HXK 4
PS22	SNU 120312	PU 02	US 42 (M8x21.0)	NT 05	MT 05	HXK 4
PS40	SNU 150312	PU 04	US 36 (M8x26.0)	NT 07	MT 07	HXK 4
PS50	SNU 190416	PU 05	US 38 (M10x29.0)	NT 06	MT 06	HXK 5
PS60	SNU 250624	PU 06	US 39 (M10x33.0)	NT 08	MT 08	HXK 5
PS70	SNU 250624	PU 06	US 47 (M12x36.0)	NT 08	MT 08	HXK 5
PS72	SNU 250624	PU 10-N	PS 12040 (M12x40.0)	NT 08	MT 08	HXK 5

● 标准库存产品 / Stock Assortiment ○ 非标准库存产品 / Non-stock Assortiment 所有尺寸 / All dimensions [mm]

PRAMET

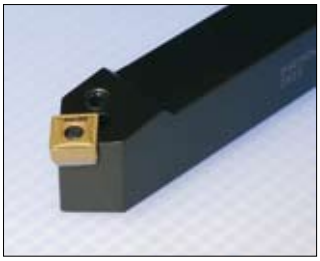

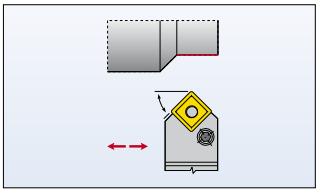

173-177

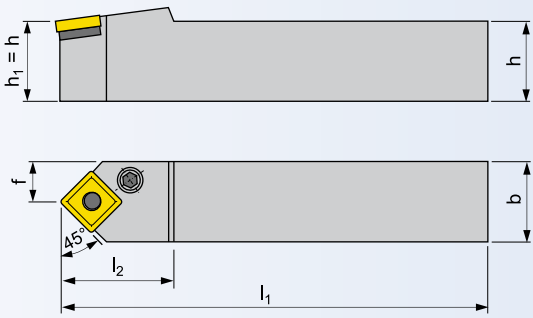

γ_o° - 刀具正前角/ tool orthogonal rake λ_s° - 刀具切削刃倾斜 / tool cutting edge inclination

刀具，用于外圆车削 / TOOL FOR EXTERNAL TURNING

ISO		尺寸 / Dimensions [mm]										kg	备件 Spare parts	刀片 Inserts
		h=h1	b	f	l1	l2max				λs°	γo°			
PSDNN 2020 K 12	●	20	20	10	125	36				-6	-6	0.35	PS22	SNM. 1204..-E
PSDNN 2525 M 12	●	25	25	12.5	150	36				-6	-6	0.60	PS20	SNM. 1204..-E
PSDNN 3232 P 15	●	32	32	16	170	40				-6	-6	1.25	PS40	SNM. 1506..-E
PSDNN 3232 P 19	●	32	32	16	170	45				-6	-6	1.25	PS50	SNM. 1906..-E
PSDNN 4040 S 19	●	40	40	20	250	45				-6	-6	3.10	PS50	SNM. 1906..-E
PSDNN 4040 S 25	●	40	40	20	250	50				-6	-6	3.20	PS60	SNM. 2507..-E
PSDNN 5050 T 25	●	50	50	25	300	50				-6	-6	5.70	PS60	SNM. 2507..-E

备件 / SPARE PARTS

类型 Type	刀垫 Shim	夹紧杠杆 Clamping lever	夹紧螺钉 Clamp. Screw	管形铆钉 Tubular rivet	安装锥形塞 Mount. taper plug	扳手 Key
PS20	SNU 120312	PU 02	US 35 (M8x22.5)	NT 05	MT 05	HXK 4
PS22	SNU 120312	PU 02	US 42 (M8x21.0)	NT 05	MT 05	HXK 4
PS40	SNU 150312	PU 04	US 36 (M8x26.0)	NT 07	MT 07	HXK 4
PS50	SNU 190416	PU 05	US 38 (M10x29.0)	NT 06	MT 06	HXK 5
PS60	SNU 250624	PU 06	US 39 (M10x33.0)	NT 08	MT 08	HXK 5

● 标准库存产品 / Stock Assortment ○ 非标准库存产品 / Non-stock Assortment 所有尺寸 / All dimensions [mm]

PSKNR/L

外圆车削 - ISO P
EXTERNAL TURNING - ISO P

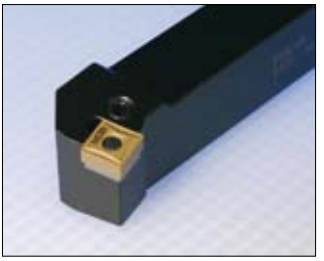

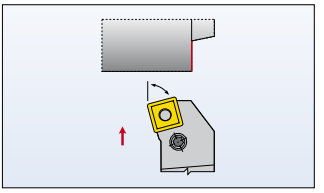

173-177

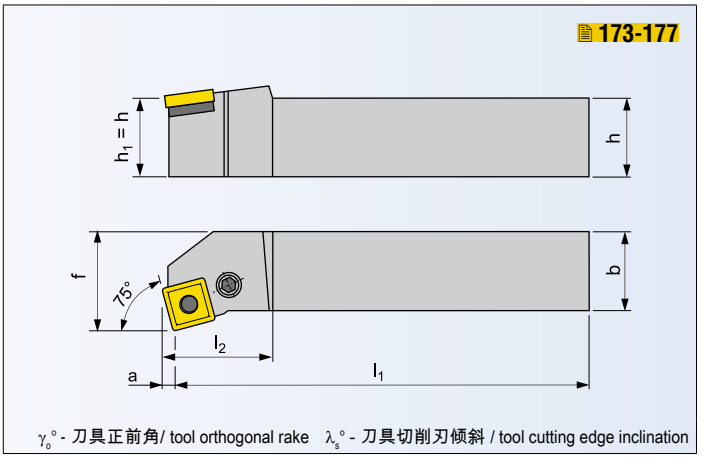

刀具，用于外圆车削 / TOOL FOR EXTERNAL TURNING

ISO	R/L	尺寸 / Dimensions [mm]										kg	备件 Spare parts	刀片 Inserts
		$h=h_1$	b	f	l_1	l_{2max}	a			$\lambda_s°$	$\gamma_o°$			
PSKNR/L 2020 K 12	● / ○	20	20	25	125	36	3.1			-6	-6	0.42	PS22	SNM. 1204..-E
PSKNR/L 2525 M 12	● / ●	25	25	32	150	36	3.1			-6	-6	0.68	PS20	SNM. 1204..-E
PSKNR/L 3225 P 15	● / ○	32	25	32	170	40	3.9			-6	-6	1.10	PS40	SNM. 1506..-E
PSKNR/L 3232 P 19	● / ●	32	32	40	170	45	4.6			-6	-6	1.40	PS50	SNM. 1906..-E
PSKNR/L 4040 S 19	● / ●	40	40	50	250	45	4.6			-6	-6	3.10	PS50	SNM. 1906..-E
PSKNR/L 4040 S 25	● / ●	40	40	50	250	50	6.5			-6	-6	3.20	PS60	SNM. 2507..-E
PSKNR/L 5050 T 25	○ / ○	50	50	60	300	50	6.5			-6	-6	5.80	PS60	SNM. 2507..-E
PSKNR/L 5050 T 2509	○ / ○	50	50	60	300	50	6.5			-6	-6	5.80	PS70	SNM. 2509..-E
PSKNR/L 5050 T 2512-A	○ / ○	50	50	60	300	50	6.5			-6	-6	5.80	PS72	SNM. 2512..-E

备件 / SPARE PARTS

类型 Type	刀垫 Shim	夹紧杠杆 Clamping lever	夹紧螺钉 Clamp. Screw	管形铆钉 Tubular rivet	安装锥形塞 Mount. taper plug	扳手 Key
PS20	SNU 120312	PU 02	US 35 (M8x22.5)	NT 05	MT 05	HXK 4
PS22	SNU 120312	PU 02	US 42 (M8x21.0)	NT 05	MT 05	HXK 4
PS40	SNU 150312	PU 04	US 36 (M8x26.0)	NT 07	MT 07	HXK 4
PS50	SNU 190416	PU 05	US 38 (M10x29.0)	NT 06	MT 06	HXK 5
PS60	SNU 250624	PU 06	US 39 (M10x33.0)	NT 08	MT 08	HXK 5
PS70	SNU 250624	PU 06	US 47 (M12x36.0)	NT 08	MT 08	HXK 5
PS72	SNU 250624	PU 10-N	PS 12040 (M12x40.0)	NT 08	MT 08	HXK 5

● 标准库存产品 / Stock Assortiment ○ 非标准库存产品 / Non-stock Assortiment 所有尺寸 / All dimensions [mm]

PRAMET

PSSNR/L

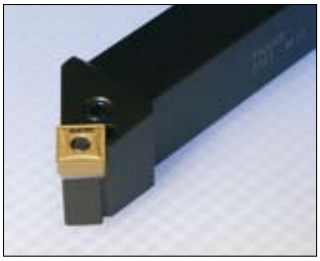

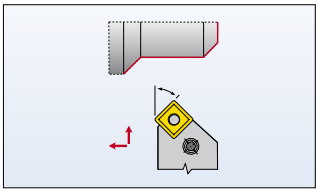

173-177

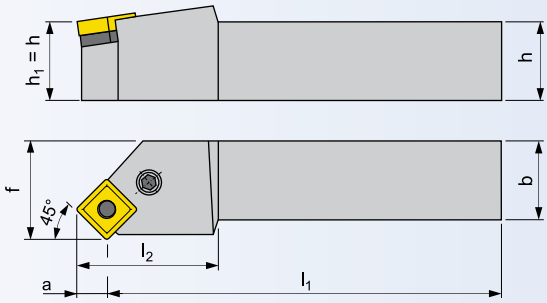

γ_o° - 刀具正前角/ tool orthogonal rake λ_s° - 刀具切削刃倾斜 / tool cutting edge inclination

刀具，用于外圆车削 / TOOL FOR EXTERNAL TURNING

ISO	R/L	尺寸 / Dimensions [mm]										kg	备件 Spare parts	刀片 Inserts
		$h=h_1$	b	f	l_1	l_{2max}	a			λ_s°	γ_o°			
PSSNR/L 2020 K 12	● / ●	20	20	25	125	36	8.3			0	-8	0.41	PS22	SNM. 1204..-E
PSSNR/L 2525 M 12	● / ●	25	25	32	150	36	8.3			0	-8	0.67	PS20	SNM. 1204..-E
PSSNR/L 3225 P 15	● / ●	32	25	32	170	40	10.2			0	-8	0.82	PS40	SNM. 1506..-E
PSSNR/L 3232 P 19	● / ●	32	32	40	170	45	12.5			0	-8	1.34	PS50	SNM. 1906..-E
PSSNR/L 4040 R 19	● / ○	40	40	50	200	45	12.5			0	-8	2.58	PS50	SNM. 1906..-E
PSSNR/L 4040 S 19	● / ●	40	40	50	250	45	12.5			0	-8	3.20	PS50	SNM. 1906..-E
PSSNR/L 5050 S 25	○ / ○	50	50	60	250	50	16			0	-8	4.75	PS60	SNM. 2507..-E
PSSNR/L 5050 T 25	○ / ○	50	50	60	300	50	16			0	-8	5.80	PS60	SNM. 2507..-E
PSSNR/L 5050 T 2509	○ / ○	50	50	60	300	50	16			0	-8	5.80	PS70	SNM. 2509..-E
PSSNR/L 5050 T 2512-A	○ / ○	50	50	60	300	50	16			0	-8	5.80	PS72	SNM. 2512..-E

备件 / SPARE PARTS

类型 Type	刀垫 Shim	夹紧杠杆 Clamping lever	夹紧螺钉 Clamp. Screw	管形铆钉 Tubular rivet	安装锥形塞 Mount. taper plug	扳手 Key
PS20	SNU 120312	PU 02	US 35 (M8x22.5)	NT 05	MT 05	HXK 4
PS22	SNU 120312	PU 02	US 42 (M8x21.0)	NT 05	MT 05	HXK 4
PS40	SNU 150312	PU 04	US 36 (M8x26.0)	NT 07	MT 07	HXK 4
PS50	SNU 190416	PU 05	US 38 (M10x29.0)	NT 06	MT 06	HXK 5
PS60	SNU 250624	PU 06	US 39 (M10x33.0)	NT 08	MT 08	HXK 5
PS70	SNU 250624	PU 06	US 47 (M12x36.0)	NT 08	MT 08	HXK 5
PS72	SNU 250624	PU 10-N	PS 12040 (M12x40.0)	NT 08	MT 08	HXK 5

● 标准库存产品 / Stock Assortment ○ 非标准库存产品 / Non-stock Assortment 所有尺寸 / All dimensions [mm]

PTFNR/L

外圆车削 - ISO P
EXTERNAL TURNING - ISO P

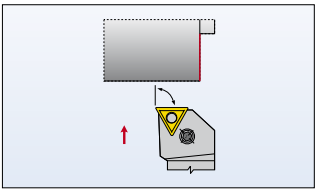

181-183

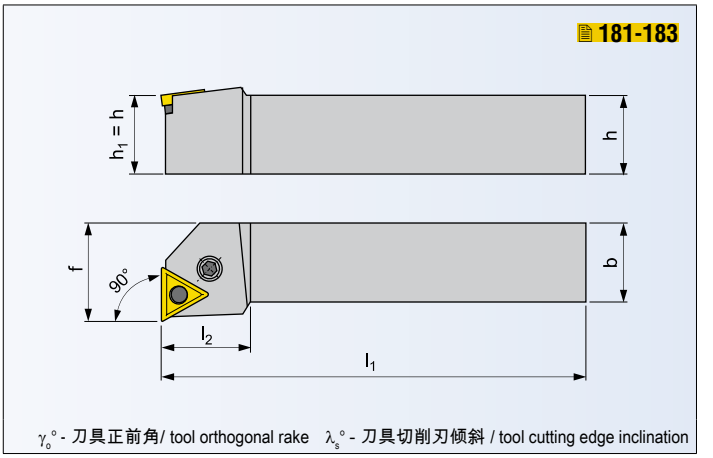

刀具，用于外圆车削 / TOOL FOR EXTERNAL TURNING

ISO	R/L	尺寸 / Dimensions [mm]										kg	备件 Spare parts	刀片 Inserts
		$h=h_1$	b	f	l_1	l_{2max}				$\lambda_s°$	$\gamma_o°$			
PTFNR/L 1616 H 16	● / ○	16	16	20	100	32				-6	-6	0.25	PT11	TNM. 1604..-E
PTFNR/L 2020 K 16	● / ○	20	20	25	125	32				-6	-6	0.40	PT10	TNM. 1604..-E
PTFNR/L 2525 M 16	● / ○	25	25	32	150	32				-6	-6	0.65	PT10	TNM. 1604..-E
PTFNR/L 2525 M 22	● / ●	25	25	32	150	36				-6	-6	0.65	PT20	TNM. 2204..-E
PTFNR/L 3225 P 22	● / ●	32	25	32	170	36				-6	-6	0.80	PT20	TNM. 2204..-E
PTFNR/L 4040 R 27	● / ○	40	40	50	200	40				-6	-6	2.55	PT40	TNM. 2706..-E

备件 / SPARE PARTS

类型 Type	刀垫 Shim	夹紧杠杆 Clamping lever	夹紧螺钉 Clamp. Screw	管形铆钉 Tubular rivet	安装锥形塞 Mount. taper plug	扳手 Key
PT10	TNU 160308	PU 01	US 34 (M6x19.0)	NT 04	MT 04	HXK 3
PT11	TNU 160308	PU 01	US 46 (M6X13.2)	NT 04	MT 04	HXK 3
PT20	TNU 220312	PU 02	US 35 (M8x22.5)	NT 05	MT 05	HXK 4
PT40	TNU 270416	PU 04	US 36 (M8x26.0)	NT 07	MT 07	HXK 4

● 标准库存产品 / Stock Assortment ○ 非标准库存产品 / Non-stock Assortment 所有尺寸 / All dimensions [mm]

PRAMET

PTGNR/L

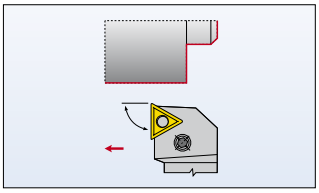

181-183

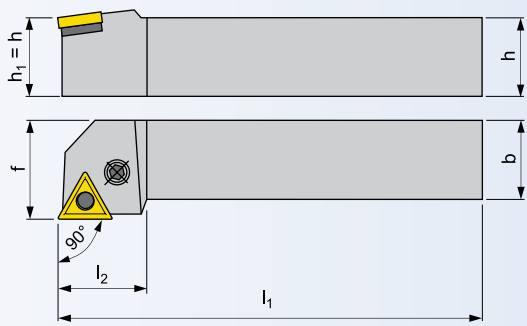

γ_o° - 刀具正前角/ tool orthogonal rake λ_s° - 刀具切削刃倾斜 / tool cutting edge inclination

刀具，用于外圆车削 / TOOL FOR EXTERNAL TURNING

ISO	R/L	尺寸 / Dimensions [mm]										kg	备件 Spare parts	刀片 Inserts
		$h=h_1$	b	f	l_1	l_{2max}				λ_s°	γ_o°			
PTGNR/L 1616 H 16	● / ○	16	16	20	100	32				-6	-6	0.25	PT11	TNM. 1604..-E
PTGNR/L 2020 K 16	● / ●	20	20	25	125	32				-6	-6	0.40	PT10	TNM. 1604..-E
PTGNR/L 2525 M 16	● / ●	25	25	32	150	32				-6	-6	0.65	PT10	TNM. 1604..-E
PTGNR/L 2525 M 22	● / ●	25	25	32	150	36				-6	-6	0.65	PT20	TNM. 2204..-E
PTGNR/L 3225 P 22	● / ○	32	25	32	170	36				-6	-6	0.80	PT20	TNM. 2204..-E
PTGNR/L 3232 P 22	● / ●	32	32	40	170	36				-6	-6	1.32	PT20	TNM. 2204..-E
PTGNR/L 4040 R 27	● / ●	40	40	50	200	40				-6	-6	2.55	PT40	TNM. 2706..-E
PTGNR/L 5050 S 27	○ / ○	50	50	60	250	40				-6	-6	4.85	PT40	TNM. 2706..-E

备件 / SPARE PARTS

类型 Type	刀垫 Shim	夹紧杠杆 Clamping lever	夹紧螺钉 Clamp. Screw	管形铆钉 Tubular rivet	安装锥形塞 Mount. taper plug	扳手 Key
PT10	TNU 160308	PU 01	US 34 (M6x19.0)	NT 04	MT 04	HXK 3
PT11	TNU 160308	PU 01	US 46 (M6x13.2)	NT 04	MT 04	HXK 3
PT20	TNU 220312	PU 02	US 35 (M8x22.5)	NT 05	MT 05	HXK 4
PT40	TNU 270416	PU 04	US 36 (M8x26.0)	NT 07	MT 07	HXK 4

● 标准库存产品 / Stock Assortment ○ 非标准库存产品 / Non-stock Assortment 所有尺寸 / All dimensions [mm]

PTTNR/L

外圆车削 - ISO P
EXTERNAL TURNING - ISO P

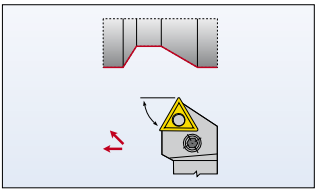

181-183

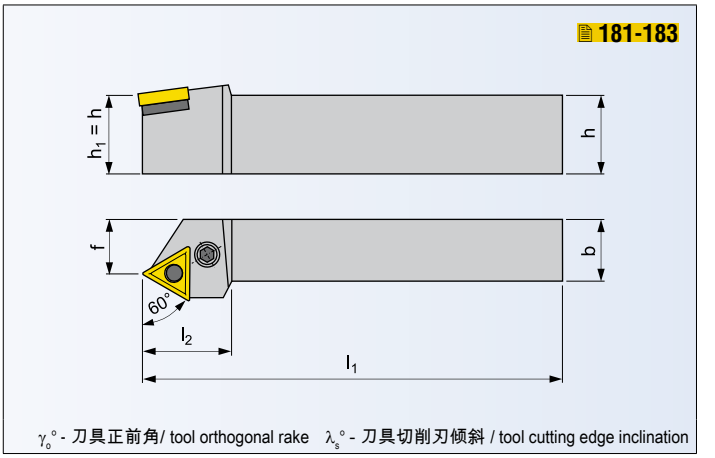

γ_o° - 刀具正前角/ tool orthogonal rake λ_s° - 刀具切削刃倾斜 / tool cutting edge inclination

刀具，用于外圆车削 / TOOL FOR EXTERNAL TURNING

ISO	R/L	尺寸 / Dimensions [mm]										kg	备件 Spare parts	刀片 Inserts
		$h=h_1$	b	f	l_1	l_{2max}				λ_s°	γ_o°			
PTTNR/L 2020 K 16	● / ○	20	20	17	125	32				-6	-6	0.38	PT10	TNM. 1604..-E
PTTNR/L 2525 M 16	● / ●	25	25	22	150	32				-6	-6	0.63	PT10	TNM. 1604..-E
PTTNR/L 3225 P 16	○ / ○	32	25	22	170	32				-6	-6	0.73	PT10	TNM. 1604..-E
PTTNR/L 2525 M 22	● / ○	25	25	22	150	36				-6	-6	0.63	PT20	TNM. 2204..-E
PTTNR/L 3225 P 22	● / ●	32	25	22	170	36				-6	-6	0.73	PT20	TNM. 2204..-E

备件 / SPARE PARTS

类型 Type	刀垫 Shim	夹紧杠杆 Clamping lever	夹紧螺钉 Clamp. Screw	管形铆钉 Tubular rivet	安装锥形塞 Mount. taper plug	扳手 Key
PT10	TNU 160308	PU 01	US 34 (M6x19.0)	NT 04	MT 04	HXK 3
PT20	TNU 220312	PU 02	US 35 (M8x22.5)	NT 05	MT 05	HXK 4

● 标准库存产品 / Stock Assortiment ○ 非标准库存产品 / Non-stock Assortiment 所有尺寸 / All dimensions [mm]

PRAMET

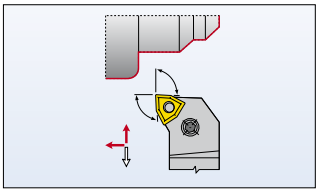

192-195

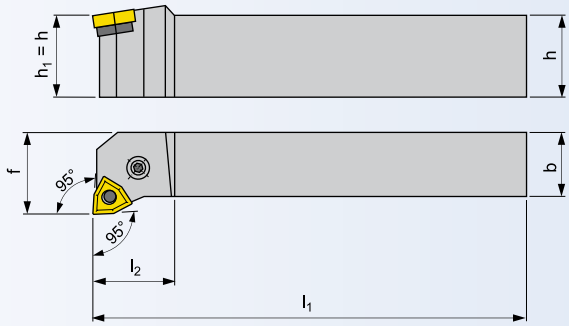

γ_o° - 刀具正前角/ tool orthogonal rake λ_s° - 刀具切削刃倾斜 / tool cutting edge inclination

刀具，用于外圆车削 / TOOL FOR EXTERNAL TURNING

ISO	R/L	尺寸 / Dimensions [mm]										kg	备件 Spare parts	刀片 Inserts
		$h=h_1$	b	f	l_1	l_{2max}				λ_s°	γ_o°			
PWLNR/L 1616 H 0604	● / ●	16	16	20	100	20				-6	-6	0.22	PW11	WNM. 0604..-E
PWLNR/L 2020 K 0604	● / ●	20	20	25	125	20				-6	-6	0.40	PW10	WNM. 0604..-E
PWLNR/L 2020 K 08	● / ●	20	20	25	125	22				-6	-6	0.40	PW22	WNM. 0804..-E
***PWLNR/L 2525 K 0604-S**	● / -	25	25	32	125	22				-6	-6	0.70	PW10	WNM. 0604..-E
PWLNR/L 2525 M 08	● / ●	25	25	32	150	22				-6	-6	0.70	PW20	WNM. 0804..-E
***PWLNR/L 2525 K 08-S**	● / -	25	25	32	125	22				-6	-6	0.70	PW20	WNM. 0804..-E
PWLNR/L 3225 P 08	● / ●	32	25	32	170	22				-6	-6	1.00	PW20	WNM. 0804..-E
***PWLNR/L 3225 L 08-S**	● / -	32	25	32	140	22				-6	-6	1.00	PW20	WNM. 0804..-E

*) 1 个轴向螺钉 OS 2，2 个侧向螺钉 SS 02 / 1 x axial screw OS 2. 2 x side screw SS 02

备件 / SPARE PARTS

类型 Type	刀垫 Shim	夹紧杠杆 Clamping lever	夹紧螺钉 Clamp. Screw	管形铆钉 Tubular rivet	安装锥形塞 Mount. taper plug	扳手 Key
PW10	WNU 060308	PU 01	US 34 (M6x19.0)	NT 04	MT 04	HXK 3
PW11	WNU 060308	PU 01	US 46 (M6x13.2)	NT 04	MT 04	HXK 3
PW20	WNU 080312	PU 02	US 35 (M8x22.5)	NT 05	MT 05	HXK 4
PW22	WNU 080312	PU 02	US 42 (M8x21.0)	NT 05	MT 05	HXK 4

● 标准库存产品 / Stock Assortment ○ 非标准库存产品 / Non-stock Assortment 所有尺寸 / All dimensions [mm]

PCLNR/L

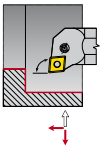

49

PDUNR/L

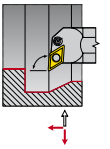

50

PSKNR/L

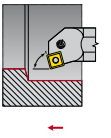

51

PTFNR/L

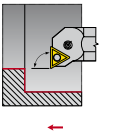

52

PWLNR/L

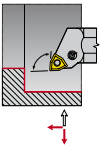

53

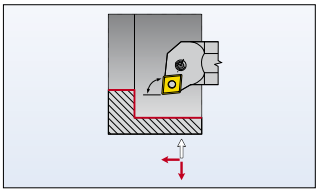

151-155, 227

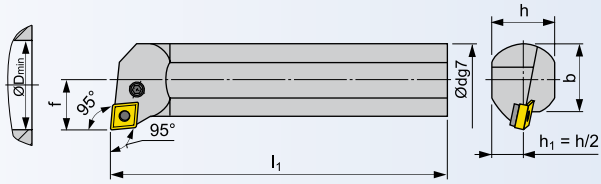

γ_o° - 刀具正前角/ tool orthogonal rake λ_s° - 刀具切削刃倾斜 / tool cutting edge inclination

刀具，用于内孔车削 / TOOL FOR INTERNAL TURNING

ISO	R/L	尺寸 / Dimensions [mm]										kg	备件 Spare parts	刀片 Inserts
		dg7	f	l_1	h	b	D_{min}			λ_s°	γ_o°			
A25R-PCLNR/L 12	● / ●	25	17	200	23	23	32			-13	-7	0.65	PC25	CNM. 1204..
S25T-PCLNR/L 12	● / ●	25	17	300	23	23	32			-13	-7	1.15	PC25	CNM. 1204..
A32S-PCLNR/L 12	● / ●	32	22	250	30	30	40			-12	-6	1.40	PC21	CNM. 1204..
A40T-PCLNR/L 12	● / ●	40	27	300	38	38	50			-12	-6	2.90	PC20	CNM. 1204..
A40T-PCLNR/L 16	● / ●	40	27	300	38	38	50			-12	-6	2.90	PC41	CNM. 1606..
A50U-PCLNR/L 16	● / ●	50	35	350	47	48.5	63			-12	-6	5.20	PC40	CNM. 1606..
A50U-PCLNR/L 19	● / ○	50	35	350	47	48.5	63			-12	-6	5.20	PC50	CNM. 1906..
A60V-PCLNR/L 16	○ / ○	60	43	400	57	58.5	80			-12	-6	8.70	PC40	CNM. 1606..
A60V-PCLNR/L 19	● / ○	60	43	400	57	58.5	80			-12	-6	8.70	PC50	CNM. 1906..

备件 / SPARE PARTS

类型 Type	刀垫 Shim	夹紧杠杆 Clamping lever	夹紧螺钉 Clamp. Screw	管形铆钉 Tubular rivet	安装锥形塞 Mount. taper plug	扳手 Key
PC20	CNU 120312	PU 02	US 35 (M8x22.5)	NT 05	MT 05	HXK 4
PC21	CNU 120312	PU 02	US 41 (M8x17.0)	NT 05	MT 05	HXK 4
PC25	-	PU 32	US 46 (M6x13.2)	-	-	HXK 3
PC40	CNU 150312	PU 04	US 36 (M8x26.0)	NT 07	MT 07	HXK 4
PC41	CNU 150312	PU 04	US 40 (M8x20.5)	NT 07	MT 07	HXK 4
PC50	CNU 190416	PU 05	US 38 (M10x29.0)	NT 06	MT 06	HXK 5

● 标准库存产品 / Stock Assortment ○ 非标准库存产品 / Non-stock Assortment 所有尺寸 / All dimensions [mm]

PDUNR/L

内孔车削 - ISO P
INTERNAL TURNING - ISO P

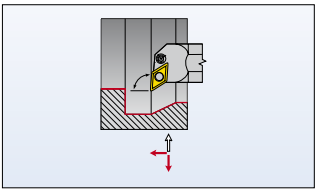

158-161

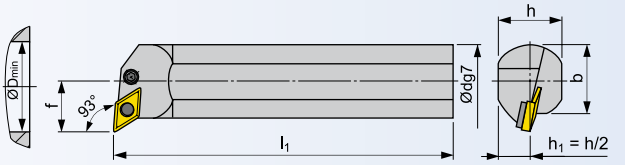

γ_o° - 刀具正前角/ tool orthogonal rake λ_s° - 刀具切削刃倾斜 / tool cutting edge inclination

刀具，用于内孔车削 / TOOL FOR INTERNAL TURNING

ISO	R/L	尺寸 / Dimensions [mm]										kg	备件 Spare parts	刀片 Inserts
		dg7	f	l_1	h	b	D_{min}			λ_s°	γ_o°			
S25T-PDUNR/L 11	●/●	25	17	300	23	23	32			-12	-6	1.15	PD61	DNM. 1104..
S32U-PDUNR/L 11	●/●	32	22	350	30	30	40			-12	-6	2.15	PD60	DNM. 1104..
A32S-PDUNR/L 15	●/●	32	22	250	30	30	40			-12	-6	1.40	PD33	DNM. 1504..
A40T-PDUNR/L 15	●/●	40	27	300	38	38	50			-12	-6	2.90	PD30	DNM. 1504..
A50U-PDUNR/L 15	●/●	50	35	350	47	48.5	63			-12	-6	5.20	PD30	DNM. 1504..
A60V-PDUNR/L 15	●/○	60	43	400	57	58.5	80			-12	-6	8.70	PD30	DNM. 1504..

备件 / SPARE PARTS

类型 Type	刀垫 Shim	夹紧杠杆 Clamping lever	夹紧螺钉 Clamp. Screw	管形铆钉 Tubular rivet	安装锥形塞 Mount. taper plug	扳手 Key
PD30	DNU 150308	PU 03	US 36 (M8x26.0)	NT 05	MT 05	HXK 4
PD33	-	PU 03-A	US 41 (M8x17.0)	NT 15	MT 05	HXK 4
PD60	PDN 110308	PU 3512	PS 0616	NT 5153	MT 0912	HXK 2.5
PD61	-	PU 3611	PS 0512	-	-	HXK 2

● 标准库存产品 / Stock Assortment ○ 非标准库存产品 / Non-stock Assortment 所有尺寸 / All dimensions [mm]

PRAMET

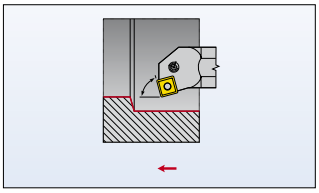

173-177

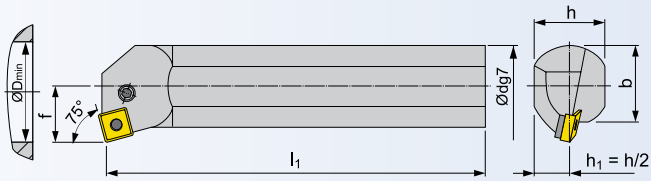

γ_o° - 刀具正前角/ tool orthogonal rake λ_s° - 刀具切削刃倾斜 / tool cutting edge inclination

刀具，用于内孔车削 / TOOL FOR INTERNAL TURNING

ISO	R/L	尺寸 / Dimensions [mm]										kg	备件 Spare parts	刀片 Inserts
		dg7	f	l_1	h	b	D_{min}			λ_s°	γ_o°			
A32S-PSKNR/L 12	● / ○	32	22	250	30	30	40			-12	-6	1.4	PS21	SNM. 1204..
A40T-PSKNR/L 12	● / ○	40	27	300	38	38	50			-12	-6	2.9	PS20	SNM. 1204..
A40T-PSKNR/L 15	○ / ○	40	27	300	38	38	50			-12	-6	2.9	PS41	SNM. 1506..
A50U-PSKNR/L 15	○ / ○	50	35	350	47	48.5	63			-12	-6	5.2	PS40	SNM. 1506..
A50U-PSKNR/L 19	○ / ○	50	35	350	47	48.5	63			-12	-6	5.2	PS50	SNM. 1906..
A60V-PSKNR/L 15	○ / ○	60	43	400	57	58.5	80			-12	-6	8.7	PS40	SNM. 1506..
A60V-PSKNR/L 19	○ / ○	60	43	400	57	58.5	80			-12	-6	8.7	PS50	SNM. 1906..

备件 / SPARE PARTS

类型 Type	刀垫 Shim	夹紧杠杆 Clamping lever	夹紧螺钉 Clamp. Screw	管形铆钉 Tubular rivet	安装锥形塞 Mount. taper plug	扳手 Key
PS20	SNU 120312	PU 02	US 35 (M8x22.5)	NT 05	MT 05	HXK 4
PS21	SNU 120312	PU 02	US 41 (M8x17.0)	NT 05	MT 05	HXK 4
PS40	SNU 150312	PU 04	US 36 (M8x26.0)	NT 07	MT 07	HXK 4
PS41	SNU 150312	PU 04	US 40 (M8x20.5)	NT 07	MT 07	HXK 4
PS50	SNU 190416	PU 05	US 38 (M10x29.0)	NT 06	MT 06	HXK 5

● 标准库存产品 / Stock Assortment ○ 非标准库存产品 / Non-stock Assortment 所有尺寸 / All dimensions [mm]

PTFNR/L

内孔车削 - ISO P
INTERNAL TURNING - ISO P

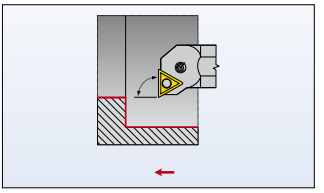

181-183

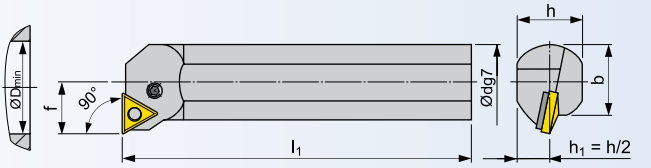

γ_o° - 刀具正前角/ tool orthogonal rake λ_s° - 刀具切削刃倾斜 / tool cutting edge inclination

刀具，用于内孔车削 / TOOL FOR INTERNAL TURNING

ISO	R/L	尺寸 / Dimensions [mm]										kg	备件 Spare parts	刀片 Inserts
		dg7	f	l_1	h	b	D_{min}			λ_s°	γ_o°			
A25R-PTFNR/L 16	● / ●	25	17	200	23	23	32			-12	-6	0.65	PT11	TNM. 1604..
A32S-PTFNR/L 16	● / ●	32	22	250	30	30	40			-12	-6	1.4	PT10	TNM. 1604..
A40T-PTFNR/L 22	○ / ○	40	27	300	38	38	50			-12	-6	2.9	PT20	TNM. 2204..
A50U-PTFNR/L 22	● / ○	50	35	350	47	48.5	63			-12	-6	5.2	PT20	TNM. 2204..
A60V-PTFNR/L 22	○ / ○	60	43	400	57	58.5	80			-12	-6	8.7	PT20	TNM. 2204..

备件 / SPARE PARTS

类型 Type	刀垫 Shim	夹紧杠杆 Clamping lever	夹紧螺钉 Clamp. Screw	管形铆钉 Tubular rivet	安装锥形塞 Mount. taper plug	扳手 Key
PT10	TNU 160308	PU 01	US 34 (M6x19.0)	NT 04	MT 04	HXK 3
PT11	TNU 160308	PU 01	US 46 (M6x13.2)	NT 04	MT 04	HXK 3
PT20	TNU 220312	PU 02	US 35 (M8x22.5)	NT 05	MT 05	HXK 4

● 标准库存产品 / Stock Assortment ○ 非标准库存产品 / Non-stock Assortment 所有尺寸 / All dimensions [mm]

PRAMET

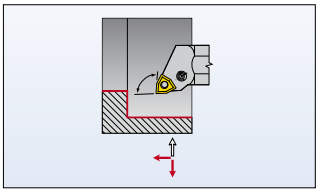

192-195

γ_o° - 刀具正前角/ tool orthogonal rake λ_s° - 刀具切削刃倾斜 / tool cutting edge inclination

刀具，用于内孔车削 / TOOL FOR INTERNAL TURNING

ISO	R/L	尺寸 / Dimensions [mm]										kg	备件 Spare parts	刀片 Inserts
		dg7	f	l_1	h	b	D_{min}			λ_s°	γ_o°			
S25T-PWLNR/L 0604	● / ●	25	17	300	23	23	32			-12	-6	0.75	PW11	WNM. 0604..
A25R-PWLNR/L 08	● / ●	25	17	200	23	23	32			-12	-6	0.65	PW25	WNM. 0804..
S25T-PWLNR/L 08	● / ●	25	17	300	23	23	32			-12	-6	0.75	PW25	WNM. 0804..
A32S-PWLNR/L 0604	○ / ○	32	22	250	30	30	40			-12	-6	1.40	PW11	WNM. 0604..
A32S-PWLNR/L 08	● / ●	32	22	250	30	30	40			-12	-6	1.40	PW21	WNM. 0804..
S32U-PWLNR/L 08	● / ●	32	22	350	30	30	40			-12	-6	2.15	PW21	WNM. 0804..
A40T-PWLNR/L 08	● / ●	40	27	300	38	38	50			-12	-6	2.90	PW20	WNM. 0804..
A50U-PWLNR/L 08	● / ●	50	35	350	47	48.5	63			-12	-6	5.20	PW20	WNM. 0804..
A60V-PWLNR/L 08	○ / ○	60	43	400	57	58.5	80			-12	-6	8.70	PW20	WNM. 0804..

备件 / SPARE PARTS

类型 Type	刀垫 Shim	夹紧杠杆 Clamping lever	夹紧螺钉 Clamp. Screw	管形铆钉 Tubular rivet	安装锥形塞 Mount. taper plug	扳手 Key
PW11	WNU 060308	PU 01	US 46 (M6x13.2)	NT 04	MT 04	HXK 3
PW20	WNU 080312	PU 02	US 35 (M8x22.5)	NT 05	MT 05	HXK 4
PW21	WNU 080312	PU 02	US 41 (M8x17)	NT 05	MT 05	HXK 4
PW25	-	PU 32	US 46 (M6x13.2)	-	-	HXK 3

● 标准库存产品 / Stock Assortiment ○ 非标准库存产品 / Non-stock Assortiment 所有尺寸 / All dimensions [mm]

ISO 代码名称 - ISO P 刀头
ISO CODE DESIGNATION - ISO P HEADS

1
刀头
Head

2
夹紧名称
Clamping designation

C	
D	
P	
M	
S	
X	
G	

3
刀片形状
Insert shape

S	C 80°
T	D 55°
R	K 55°
W 80°	V 35°
L	X 特殊规格 Special

4
刀具类型 - 主偏角
Tool style - cutting edge angle

A 90°	B 75°	C 90°	D 45°	D
E 60°	F 90°	G 90°	H 107°30´	J 93°
K 75°	L 95°	M 50°	N 62°30´	P 117°30´
Q 107°30´	R 75°	S 45°	S	T 60°
U 93°	V 72°30´	W 60°	X 特殊规格 Special	Y 85°
Z K				

5
后角
Clearance angle

N	C	P
α_n=0°	α_n=7°	α_n=11°

6
切削方向
Direction of cut

R	
L	
N	

1	2		3	4	5	6	7
KH	P	-	C	L	N	R	25

8	6	9	10	11
DKH	R	50	60	W

7
切削刃长度
Cutting edge lenght

	S	C	D	V	K	W	T	R
d [mm]								
6,00								06
6,35		06	07	11			11	
8,00								08
9,525	09	09	11	16	19	06	16	
10,00								10
12,00								12
12,70	12	12	15			08	22	12
15,875	15	16					27	15
16,00								16
19,05	19	19					33	19
20,00								20
25,00								25
25,40	25	25						25
38,10	38							

8
刀头刀柄
Head holder

9
刀柄高度 [mm]
Shank height [mm]

08	10	12	16	20	25
32	40	50	60	70	80

10
刀柄宽度 [mm]
Shank width [mm]

08	10	12	16	20	25
32	40	50	60	70	80

11
总长
Total lenght

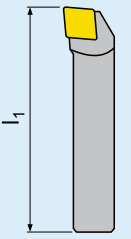

	l_1 [mm]
H	100
J	110
K	125
L	140
M	150
N	160
P	170
Q	180
R	200
S	250
T	300
U	350
V	400
W	450
X	特殊规格 Special
Y	500

PRAMET

KHP-CBNR/L

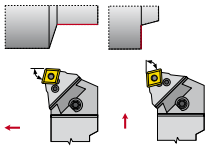

56

KHP-CLNR/L

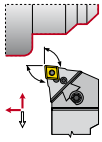

57

KHP-LBNR/L

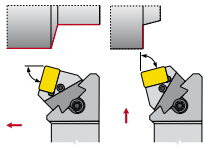

58

KHP-RSCR/L

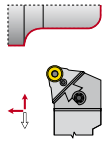

59

KHP-SBNR/L

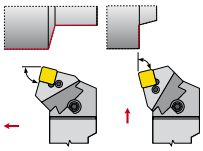

60

KHP-SSNR/L

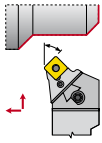

61

KHP-TGNR/L

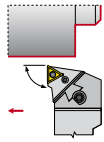

62

KHS-SBCR/L

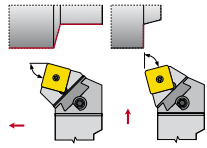

63

DKH

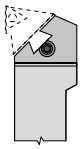

64

KHP-CBNR/L

外圆车削 - 刀头
EXTERNAL TURNING - HEADS

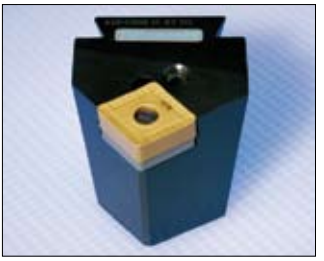

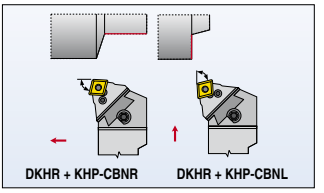

154-155

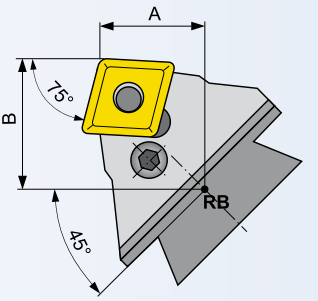

γ_o° - 刀具正前角/ tool orthogonal rake λ_s° - 刀具切削刃倾斜 / tool cutting edge inclination

外圆车削 - 刀头 / EXTERNAL TURNING - HEADS

ISO	R/L	尺寸 / Dimensions [mm] A	B							λ_s°	γ_o°	kg	备件 Spare parts	刀片 Inserts
KHP-CBNR/L 25	● / ●	32	47							-6	-6	1.30	PC60	CNM. 2509..-E

备件 / SPARE PARTS

类型 Type	刀垫 Shim	夹紧杠杆 Clamping lever	夹紧螺钉 Clamp. Screw	管形铆钉 Tubular rivet	安装锥形塞 Mount. taper plug	扳手 Key
PC60	CNU 250620	PU 06	US 39 (M10x33.0)	NT 08	MT 08	HXK 5

● 标准库存产品 / Stock Assortiment ○ 非标准库存产品 / Non-stock Assortiment 所有尺寸 / All dimensions [mm]

PRAMET

KHP-CLNR/L

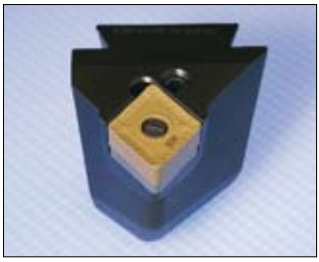

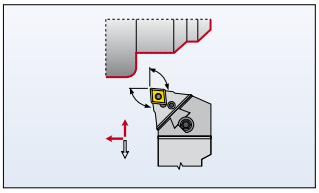

151-155, 227

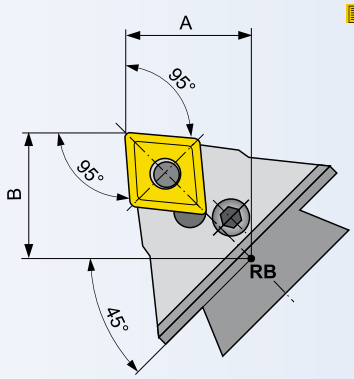

γ_o° - 刀具正前角/ tool orthogonal rake λ_s° - 刀具切削刃倾斜 / tool cutting edge inclination

外圆车削 - 刀头 / EXTERNAL TURNING - HEADS

ISO	R/L	尺寸 / Dimensions [mm] A	B							λ_s°	γ_o°	kg	备件 Spare parts	刀片 Inserts
KHP-CLNR/L 12	○ / ○	35	45							-6	-6	1.30	PC20	CNM. 1204..-E
KHP-CLNR/L 16	○ / ○	35	45							-6	-6	1.30	PC40	CNM. 1606..-E
KHP-CLNR/L 19	● / ●	35	45							-6	-6	1.30	PC50	CNM. 1906..-E
KHP-CLNR/L 25	● / ●	35	45							-6	-6	1.30	PC60	CNM. 2509..-E

备件 / SPARE PARTS

类型 Type	刀垫 Shim	夹紧杠杆 Clamping lever	夹紧螺钉 Clamp. Screw	管形铆钉 Tubular rivet	安装锥形塞 Mount. taper plug	扳手 Key
PC20	CNU 120312	PU 02	US 35 (M8x22.5)	NT 05	MT 05	HXK 4
PC40	CNU 150312	PU 04	US 36 (M8x26.0)	NT 07	MT 07	HXK 4
PC50	CNU 190416	PU 05	US 38 (M10x29.0)	NT 06	MT 06	HXK 5
PC60	CNU 250620	PU 06	US 39 (M10x33.0)	NT 08	MT 08	HXK 5

● 标准库存产品 / Stock Assortment ○ 非标准库存产品 / Non-stock Assortment 所有尺寸 / All dimensions [mm]

KHP-LBNR/L

外圆车削 - 刀头
EXTERNAL TURNING - HEADS

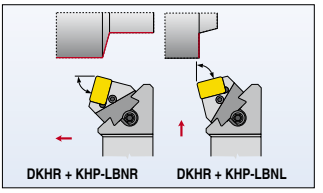

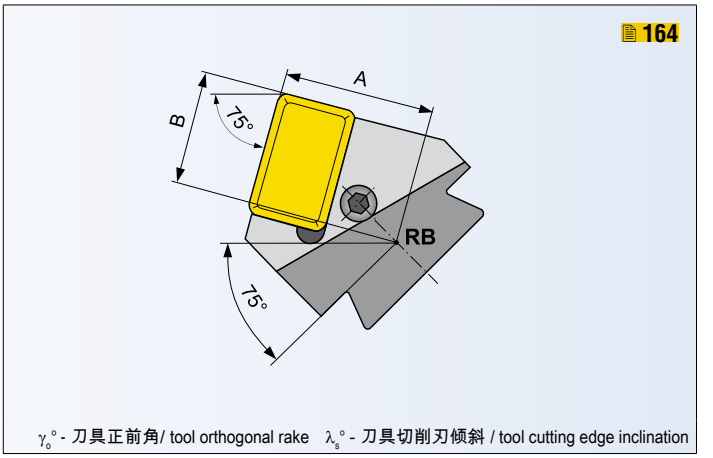

外圆车削 - 刀头 / EXTERNAL TURNING - HEADS

ISO	R/L	尺寸 / Dimensions [mm] A	B							λ_s°	γ_o°	kg	备件 Spare parts	刀片 Inserts
KHP-LBNR/L 40-A	● / ●	48	36							-6	-6	1.40	PL71	LNUX 40....

用于 KHP-LBNR/L 40 刀柄 DKH 6080W / FOR KHP-LBNR/L 40 HOLDER DKH. 6080W

备件 / SPARE PARTS

类型 Type	刀垫 Shim	夹紧杠杆 Clamping lever	夹紧螺钉 Clamp. Screw	管形铆钉 Tubular rivet	安装锥形塞 Mount. taper plug	扳手 Key
PL71	LNX 400632	PU 06	PS 12040 (M12x40.0)	NT 08	MT 08	HXK 5

● 标准库存产品 / Stock Assortiment ○ 非标准库存产品 / Non-stock Assortiment 所有尺寸 / All dimensions [mm]

PRAMET

KHP-RSCR/L

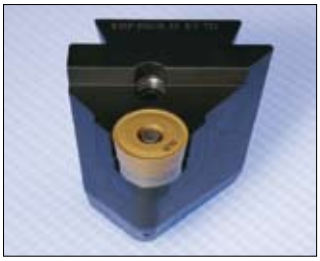

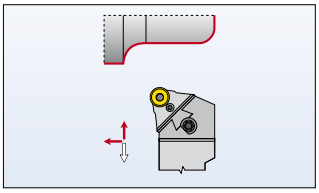

168

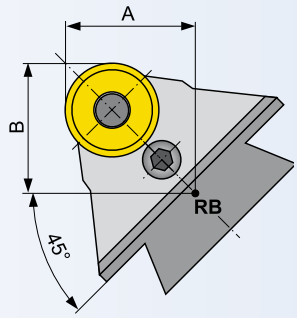

γ_o° - 刀具正前角/ tool orthogonal rake λ_s° - 刀具切削刃倾斜 / tool cutting edge inclination

外圆车削 - 刀头 / EXTERNAL TURNING - HEADS

ISO	R/L	尺寸 / Dimensions [mm] A	B							λ_s°	γ_o°	kg	备件 Spare parts	刀片 Inserts
KHP-RSCR/L 16	○ / ○	35	45							0	0	1.30	PRP70	RCMX 1606 MO
KHP-RSCR/L 20	● / ○	35	45							0	0	1.30	PRP90	RCMX 2006 MO
KHP-RSCR/L 25	● / ●	35	45							0	0	1.30	PRP80	RCMX 2507 MO
KHP-RSCR/L 32	● / ●	35	45							0	0	1.30	PRP100	RCMX 3209 MO

备件 / SPARE PARTS

类型 Type	刀垫 Shim	夹紧杠杆 Clamping lever	夹紧螺钉 Clamp. Screw	管形铆钉 Tubular rivet	安装锥形塞 Mount. taper plug	扳手 Key
PRP70	RCU 160300	PU 07	US 36 (M8 x 26.0)	NT 05	MT 05	HXK 4
PRP80	RCU 250600	PU 08	US 38 (M10 x 29.0)	NT 06	MT 06	HXK 5
PRP90	RCU 200400	PU 09	US 36 (M8 x 26.0)	NT 07	MT 07	HXK 4
PRP100	RCU 320600	PU 10	US 47 (M12 x 36.0)	NT 08	MT 08	HXK 5

● 标准库存产品 / Stock Assortiment ○ 非标准库存产品 / Non-stock Assortiment 所有尺寸 / All dimensions [mm]

KHP-SBNR/L

外圆车削 - 刀头
EXTERNAL TURNING - HEADS

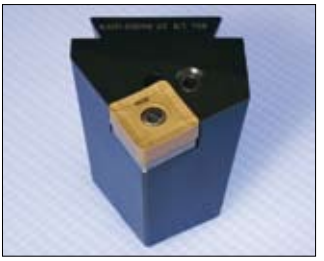

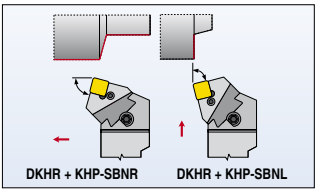

173, 175-177

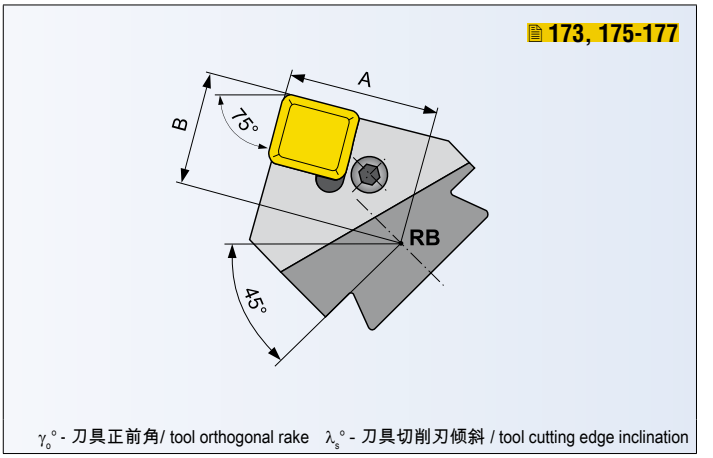

外圆车削 - 刀头 / EXTERNAL TURNING - HEADS

ISO	R/L	尺寸 / Dimensions [mm] A	B							λ_s°	γ_o°	kg	备件 Spare parts	刀片 Inserts
KHP-SBNR/L 25	● / ●	47	36							-6	-6	1.30	PS60	SNM. 2507..-E
KHP-SBNR/L 2509	● / ●	47	36							-6	-6	1.30	PS70	SNM. 2509..-E
KHP-SBNR/L 2512-A	● / ●	47	36							-6	-6	1.30	PS72	SNM. 2512..-E

备件 / SPARE PARTS

类型 Type	刀垫 Shim	夹紧杠杆 Clamping lever	夹紧螺钉 Clamp. Screw	管形铆钉 Tubular rivet	安装锥形塞 Mount. taper plug	扳手 Key
PS60	SNU 250624	PU 06	US 39 (M10x33.0)	NT 08	MT 08	HXK 5
PS70	SNU 250624	PU 06	US 47 (M12x36.0)	NT 08	MT 08	HXK 5
PS72	SNU 250624	PU 10-N	PS 12040 (M12x40.0)	NT 08	MT 08	HXK 5

● 标准库存产品 / Stock Assortment ○ 非标准库存产品 / Non-stock Assortment 所有尺寸 / All dimensions [mm]

PRAMET

KHP-SSNR/L

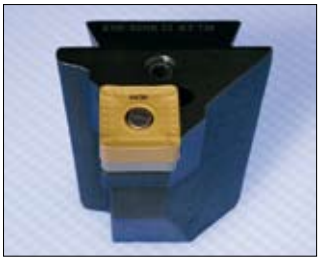

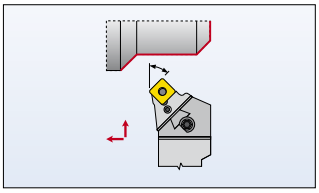

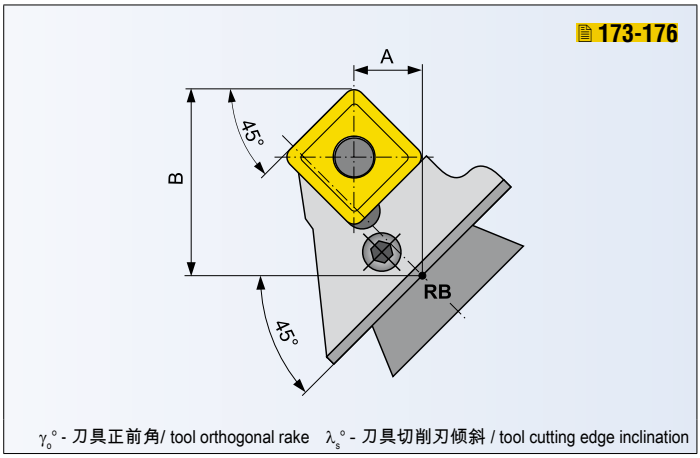

外圆车削 - 刀头 / EXTERNAL TURNING - HEADS

ISO	R/L	尺寸 / Dimensions [mm] A	B							λ_s°	γ_o°	kg	备件 Spare parts	刀片 Inserts
KHP-SSNR/L 19	○ / ○	15	45							-6	-6	1.30	PS50	SNM. 1906..-E
KHP-SSNR/L 25	● / ●	15	45							-6	-6	1.30	PS60	SNM. 2507..-E

备件 / SPARE PARTS

类型 Type	刀垫 Shim	夹紧杠杆 Clamping lever	夹紧螺钉 Clamp. Screw	管形铆钉 Tubular rivet	安装锥形塞 Mount. taper plug	扳手 Key
PS50	SNU 190416	PU 05	US 38 (M10x29.0)	NT 06	MT 06	HXK 5
PS60	SNU 250624	PU 06	US 39 (M10x33.0)	NT 08	MT 08	HXK 5

● 标准库存产品 / Stock Assortiment ○ 非标准库存产品 / Non-stock Assortiment 所有尺寸 / All dimensions [mm]

KHP-TGNR/L

外圆车削 - 刀头
EXTERNAL TURNING - HEADS

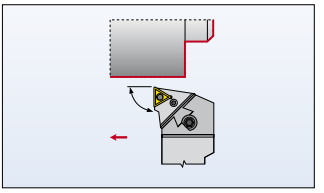

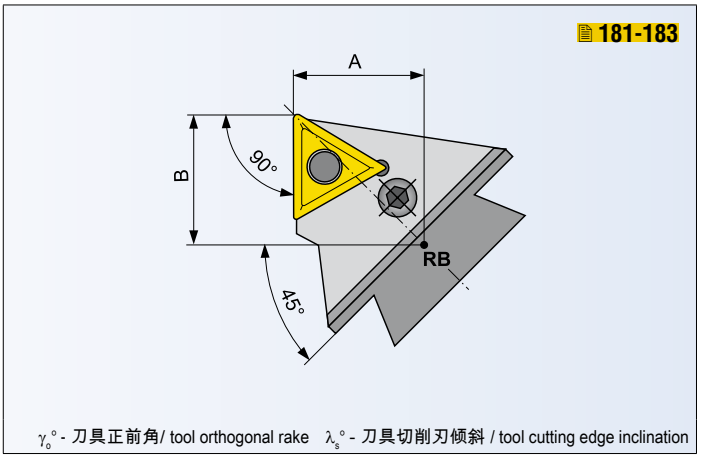

外圆车削 - 刀头 / EXTERNAL TURNING - HEADS

ISO	R/L	尺寸 / Dimensions [mm] A	B							λ_s°	γ_o°	kg	备件 Spare parts	刀片 Inserts
KHP-TGNR/L 22	○ / ○	35	45							-6	-6	1.30	PT20	TNM. 2204..-E
KHP-TGNR/L 27	○ / ○	35	45							-6	-6	1.30	PT40	TNM. 2706..-E
KHP-TGNR/L 33	○ / ○	35	45							-6	-6	1.30	PT50	TNM. 3307..-E

备件 / SPARE PARTS

类型 Type	刀垫 Shim	夹紧杠杆 Clamping lever	夹紧螺钉 Clamp. Screw	管形铆钉 Tubular rivet	安装锥形塞 Mount. taper plug	扳手 Key
PT20	TNU 220312	PU 02	US 35 (M8 x 22.5)	NT 05	MT 05	HXK 4
PT40	TNU 270416	PU 04	US 36 (M8 x 26.0)	NT 07	MT 07	HXK 4
PT50	TNU 330412	PU 05	US 38 (M10 x 29.0)	NT 06	MT 06	HXK 5

● 标准库存产品 / Stock Assortment ○ 非标准库存产品 / Non-stock Assortment 所有尺寸 / All dimensions [mm]

PRAMET

KHS-SBCR/L

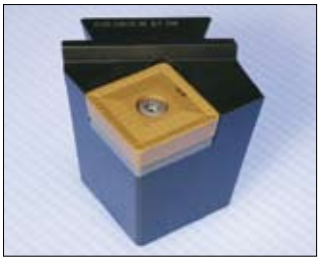

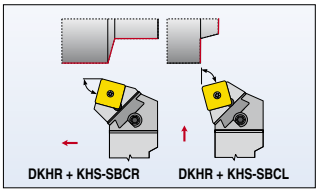

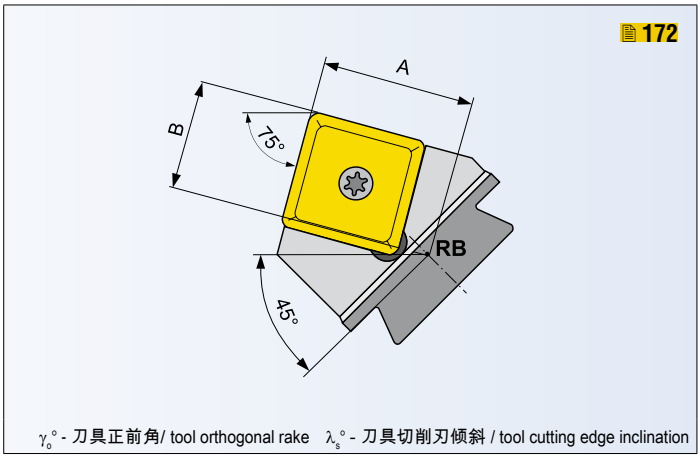

外圆车削 - 刀头 / EXTERNAL TURNING - HEADS

ISO	R/L	尺寸 / Dimensions [mm] A	B							λ_s°	γ_o°	kg	备件 Spare parts	刀片 Inserts
KHS-SBCR/L 25	○ / ○	47	36							0	0	1.30	SS25	SC.. 2509..
KHS-SBCR/L 38-A	● / ●	47	36							0	0	1.40	SS38	SC.. 3809..

用于 KHP-LBNR/L 40 刀柄 DKH 6080W / FOR KHP-LBNR/L 40 HOLDER DKH. 6080W

备件 / SPARE PARTS

类型 Type	夹紧螺钉 Clamp. Screw	螺纹 Thread	刀垫 Shim	刀垫螺钉 Shim screw	螺丝刀 Screwdriver	扳手 Key
SS25	US 8025-T30P	(M8x25.0)	SSN 250620	MS 8020	SDR T30P	HXK 5
SS38	US 8025-T30P	(M8x25.0)	SSN 380620	MS 8020	SDR T30P	HXK 5

● 标准库存产品 / Stock Assortment ○ 非标准库存产品 / Non-stock Assortment 所有尺寸 / All dimensions [mm]

DKH

外圆车削 - 刀头
EXTERNAL TURNING - HEADS

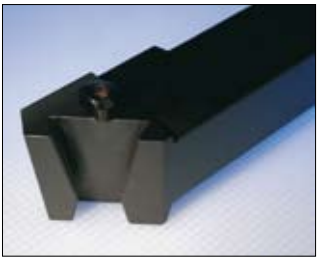

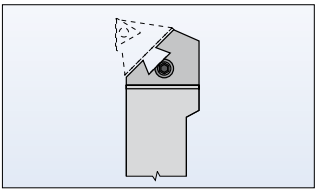

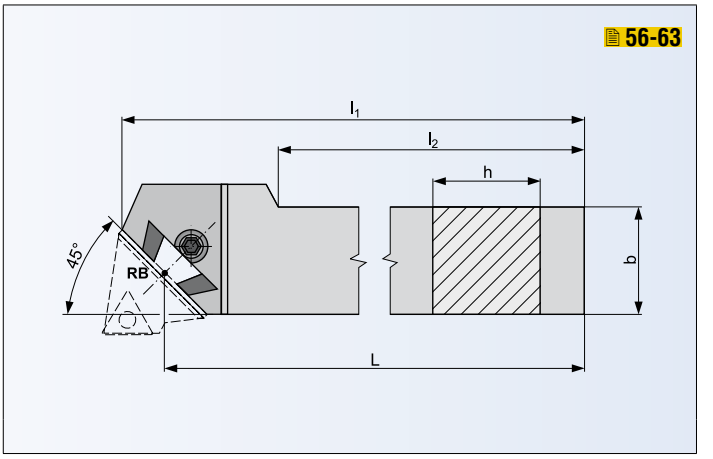

刀柄适用刀头 / HOLDERS FOR HEADS

ISO	R/L	尺寸 / Dimensions [mm]										kg	备件 Spare parts	刀片 Inserts
		$h=h_1$	b	L	l_1	l_2				λ_s°	γ_o°			
DKHR/L 4050 V	● / ○	40	50	400	425	325						7.80	DKH10	-
DKHR/L 5060 W	● / ●	50	60	450	475	365						11.30	DKH10	-
DKHR/L 6080 W-A	● / ●	60	80	450	485	395						20.50	DKH10	-

刀柄 DKHR/L 6080W IS 适用刀片 LNUX 40 AND SCMT 38 / HOLDER DKHR/L 6080W IS FOR INSERT LNUX 40 AND SCMT 38
刀头需要的另一组刀夹尺寸 / ANOTHER DIMENSION OF HOLDER FOR HEADS FOR DEMAND

备件 / SPARE PARTS

Type Tipo	螺钉 Screw	扳手 Key				
DKH10	SR 14	HXK 10				

● 标准库存产品 / Stock Assortment ○ 非标准库存产品 / Non-stock Assortment

所有尺寸 / All dimensions [mm]

PRAMET

1 刀卡 Cartridge

2 夹紧名称 Clamping designation

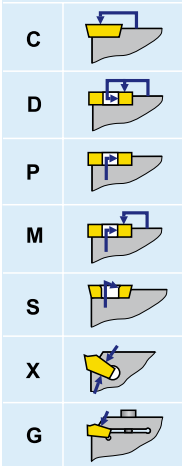

3 刀片形状 Insert shape

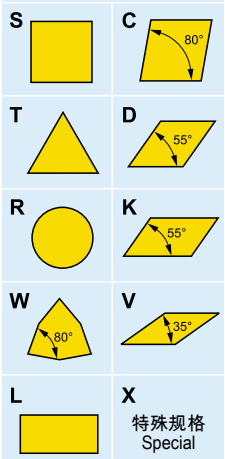

4 刀具类型 - 主偏角 Tool style - cutting edge angle

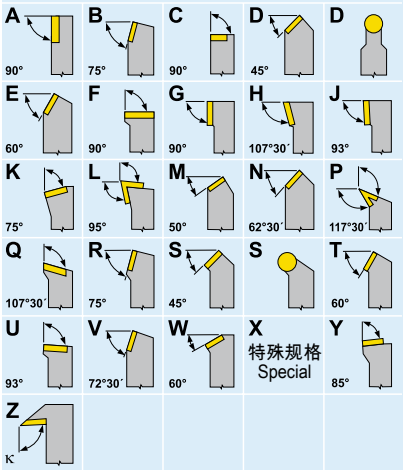

5 后角 Clearance angle

N	C	P
α_n=0°	α_n=7°	α_n=11°

6 切削方向 Direction of cut

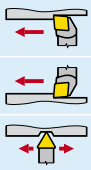

1	2		3	4	5	6	7
K	P	-	S	B	N	R	25

8	6	9	10	11
DK	R	60	60	V

7 切削刃长度 Cutting edge lenght

d [mm]	S	C	D	V	K	W	T	R
6.00								06
6.35		06	07	11			11	
8.00								08
9.525	09	09	11	16	19	06	16	
10.00								10
12.00								12
12.70	12	12	15			08	22	12
15.875	15	16					27	15
16.00								16
19.05	19	19						19
20.00								20
25.00								25
25.40	25	25						25

8 刀卡刀柄 Catridge holder

9 刀柄高度 [mm] Shank height [mm]

08	10	12	16	20	25
32	40	50	60	70	

10 刀柄宽度 [mm] Shank width [mm]

08	10	12	16	20	25
32	40	50	60	70	80

11 总长 Total lenght

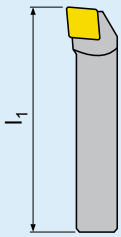

	l_1 [mm]
H	100
J	110
K	125
L	140
M	150
N	160
P	170
Q	180
R	200
S	250
T	300
U	350
V	400
W	450
X	特殊规格 Special
Y	500

产品系列 - 刀卡，用于重载粗加工
PRODUCT LINE - CARTRIDGES FOR HEAVY ROUGHING

KP-LBNR/L

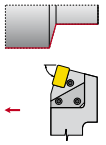

67

KP-LKNR/L

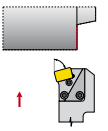

68

KP-SBNR/L

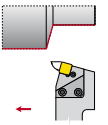

69

KP-SKNR/L

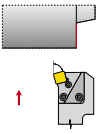

70

KS-SBCR/L

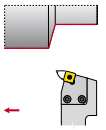

71

KS-SKCR/L

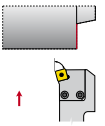

72

DKR

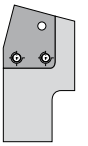

73

PRAMET

KP-LBNR/L

刀卡，用于重载粗加工
CARTRIDGES FOR HEAVY ROUGHING

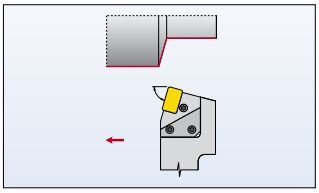

164

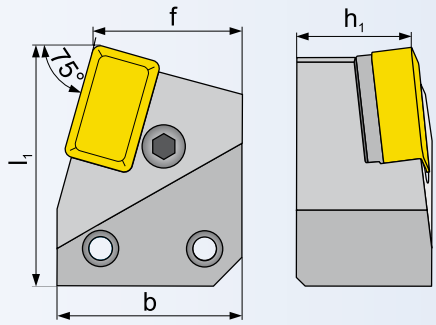

γ_o° - 刀具正前角/ tool orthogonal rake λ_s° - 刀具切削刃倾斜 / tool cutting edge inclination

外圆车削 - 刀卡 / EXTERNAL TURNING - CARTRIDGES

ISO	R/L	尺寸 / Dimensions [mm]										kg	备件 Spare parts	刀片 Inserts
		h_1	b	f	l_1					λ_s°	γ_o°			
KP-LBNR/L 40	○ / ○	40	64.5	52.5	83					-6	-6	1.4	PL71	LNUX 40....

备件 / SPARE PARTS

类型 Type	刀垫 Shim	夹紧杠杆 Clamping lever	夹紧螺钉 Clamp. Screw	管形铆钉 Tubular rivet	安装锥形塞 Mount. taper plug	扳手 Key
PL71	LNX 400632	PU 06	PS 12040 (M12x40.0)	NT 08	MT 08	HXK 5

● 标准库存产品 / Stock Assortment ○ 非标准库存产品 / Non-stock Assortment 所有尺寸 / All dimensions [mm]

KP-LKNR/L

刀卡，用于重载粗加工
CARTRIDGES FOR HEAVY ROUGHING

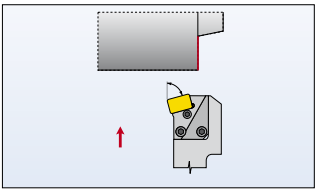

164

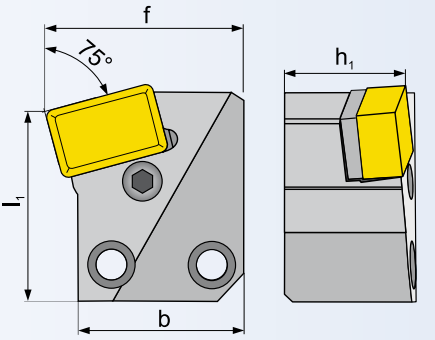

γ_o° - 刀具正前角/ tool orthogonal rake λ_s° - 刀具切削刃倾斜 / tool cutting edge inclination

外圆车削 - 刀卡 / EXTERNAL TURNING - CARTRIDGES

ISO	R/L	尺寸 / Dimensions [mm]										kg	备件 Spare parts	刀片 Inserts
		h_1	b	f	l_1					λ_s°	γ_o°			
KP-LKNR/L 40	○ / ○	40	60	71	68					-6	-6	1.4	PL71	LNUX 40....

备件 / SPARE PARTS

类型 Type	刀垫 Shim	夹紧杠杆 Clamping lever	夹紧螺钉 Clamp. Screw	管形铆钉 Tubular rivet	安装锥形塞 Mount. taper plug	扳手 Key
PL71	LNX 400632	PU 06	PS 12040 (M12x40.0)	NT 08	MT 08	HXK 5

● 标准库存产品 / Stock Assortiment ○ 非标准库存产品 / Non-stock Assortiment 所有尺寸 / All dimensions [mm]

PRAMET

KP-SBNR/L

刀卡，用于重载粗加工
CARTRIDGES FOR HEAVY ROUGHING

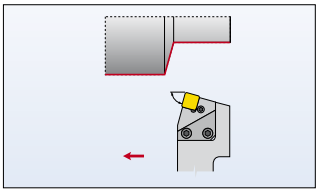

173. 175-177

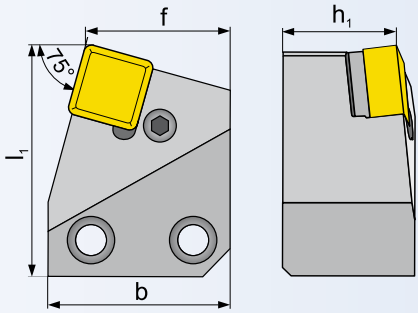

γ_o° - 刀具正前角/ tool orthogonal rake λ_s° - 刀具切削刃倾斜 / tool cutting edge inclination

外圆车削 - 刀卡 / EXTERNAL TURNING - CARTRIDGES

ISO	R/L	尺寸 / Dimensions [mm]										kg	备件 Spare parts	刀片 Inserts
		h_1	b	f	l_1					λ_s°	γ_o°			
KP-SBNR/L 25	○ / ○	40	64	51.5	82					-6	-6	1.40	PS60	SNM. 2507..-E
KP-SBNR/L 2509	○ / ○	40	64	51.5	82					-6	-6	1.40	PS70	SNM. 2509..-E
KP-SBNR/L 2512-A	○ / ○	40	64	51.5	82					-6	-6	1.40	PS72	SNM. 2512..-E

备件 / SPARE PARTS

类型 Type	刀垫 Shim	夹紧杠杆 Clamping lever	夹紧螺钉 Clamp. Screw	管形铆钉 Tubular rivet	安装锥形塞 Mount. taper plug	扳手 Key
PS60	SNU 250624	PU 06	US 39 (M10x33.0)	NT 08	MT 08	HXK 5
PS70	SNU 250624	PU 06	US 47 (M12x36.0)	NT 08	MT 08	HXK 5
PS72	SNU 250624	PU 10-N	PS 12040 (M12x40.0)	NT 08	MT 08	HXK 5

● 标准库存产品 / Stock Assortment ○ 非标准库存产品 / Non-stock Assortment 所有尺寸 / All dimensions [mm]

KP-SKNR/L

刀卡，用于重载粗加工
CARTRIDGES FOR HEAVY ROUGHING

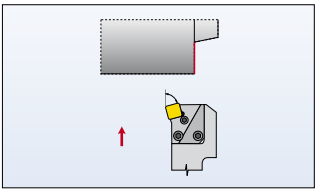

173, 175-177

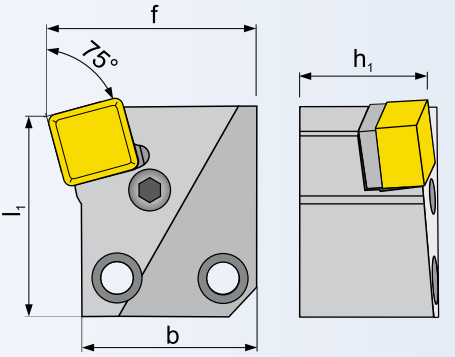

γ_o° - 刀具正前角/ tool orthogonal rake λ_s° - 刀具切削刃倾斜 / tool cutting edge inclination

外圆车削 - 刀卡 / EXTERNAL TURNING - CARTRIDGES

ISO	R/L	尺寸 / Dimensions [mm]										kg	备件 Spare parts	刀片 Inserts
		h_1	b	f	l_1					λ_s°	γ_o°			
KP-SKNR/L 25	○ / ○	40	60	70	68					-6	-6	1.40	PS60	SNM. 2507..-E
KP-SKNR/L 2509	○ / ○	40	60	70	68					-6	-6	1.40	PS70	SNM. 2509..-E
KP-SKNR/L 2512-A	○ / ○	40	60	70	68					-6	-6	1.40	PS72	SNM. 2512..-E

备件 / SPARE PARTS

类型 Type	刀垫 Shim	夹紧杠杆 Clamping lever	夹紧螺钉 Clamp. Screw	管形铆钉 Tubular rivet	安装锥形塞 Mount. taper plug	扳手 Key
PS60	SNU 250624	PU 06	US 39 (M10x33.0)	NT 08	MT 08	HXK 5
PS70	SNU 250624	PU 06	US 47 (M12x36.0)	NT 08	MT 08	HXK 5
PS72	SNU 250624	PU 10-N	PS 12040 (M12x40.0)	NT 08	MT 08	HXK 5

● 标准库存产品 / Stock Assortment ○ 非标准库存产品 / Non-stock Assortment 所有尺寸 / All dimensions [mm]

PRAMET

KS-SBCR/L

刀卡，用于重载粗加工
CARTRIDGES FOR HEAVY ROUGHING

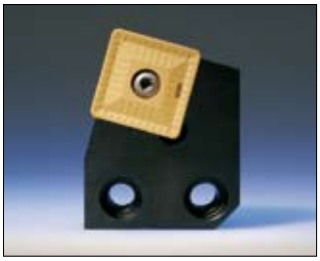

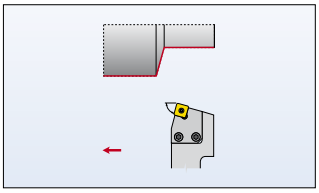

172

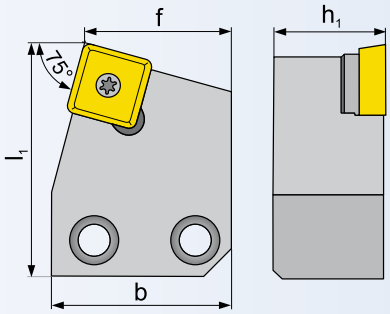

γ_o° - 刀具正前角/ tool orthogonal rake λ_s° - 刀具切削刃倾斜 / tool cutting edge inclination

外圆车削 - 刀卡 / EXTERNAL TURNING - CARTRIDGES

ISO	R/L	尺寸 / Dimensions [mm]										kg	备件 Spare parts	刀片 Inserts
		h_1	b	f	l_1					λ_s°	γ_o°			
KS-SBCR/L 25	○ / ○	40	64.5	53	83					0	0	1.30	SS25	SC.. 2509..
KS-SBCR/L 38	○ / ○	40	64.5	53	83					0	0	1.30	SS38	SC.. 3809..

备件 / SPARE PARTS

类型 Type	刀垫 Shim	夹紧杠杆 Clamping lever	夹紧螺钉 Clamp. Screw	管形铆钉 Tubular rivet	安装锥形塞 Mount. taper plug	扳手 Key
SS25	US 8025-T30P	(M8x25.0)	SSN 250620	MS 8020	SDR T30P	HXK 5
SS38	US 8025-T30P	(M8x25.0)	SSN 380620	MS 8020	SDR T30P	HXK 5

● 标准库存产品 / Stock Assortment ○ 非标准库存产品 / Non-stock Assortment 所有尺寸 / All dimensions [mm]

KS-SKCR/L

刀卡，用于重载粗加工
CARTRIDGES FOR HEAVY ROUGHING

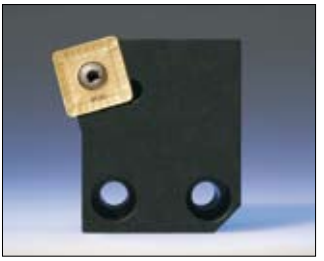

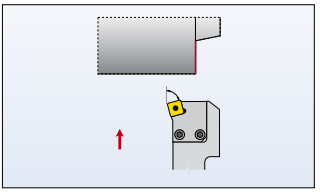

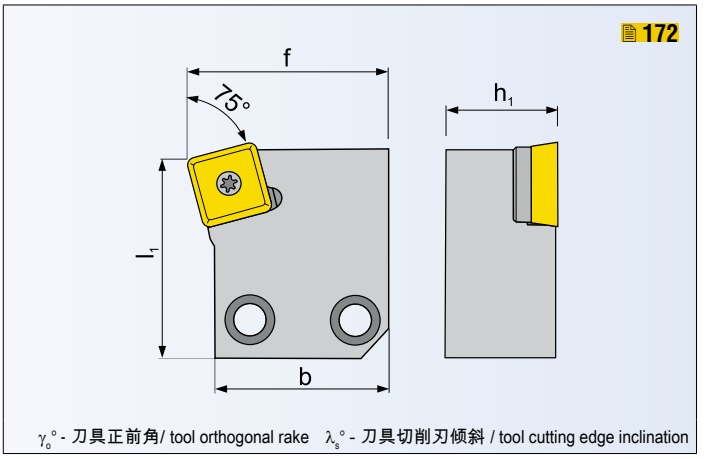

外圆车削 - 刀卡 / EXTERNAL TURNING - CARTRIDGES

ISO	R/L	尺寸 / Dimensions [mm]										kg	备件 Spare parts	刀片 Inserts
		h_1	b	f	l_1					λ_s°	γ_o°			
KS-SKCR/L 25	○ / ○	40	60	71.5	68					0	0	1.30	SS25	SC.. 2509..
KS-SKCR/L 38	○ / ○	40	60	71.5	68					0	0	1.30	SS38	SC.. 3809..

备件 / SPARE PARTS

类型 Type	刀垫 Shim	夹紧杠杆 Clamping lever	夹紧螺钉 Clamp. Screw	管形铆钉 Tubular rivet	安装锥形塞 Mount. taper plug	扳手 Key
SS25	US 8025-T30P	(M8x25.0)	SSN 250620	MS 8020	SDR T30P	HXK 5
SS38	US 8025-T30P	(M8x25.0)	SSN 380620	MS 8020	SDR T30P	HXK 5

● 标准库存产品 / Stock Assortment ○ 非标准库存产品 / Non-stock Assortment

所有尺寸 / All dimensions [mm]

PRAMET

DKR/L

刀卡，用于重载粗加工
CARTRIDGES FOR HEAVY ROUGHING

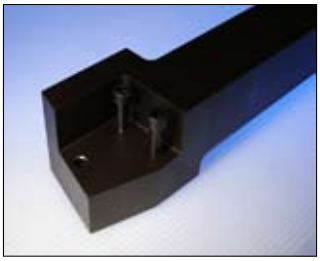

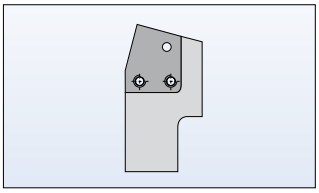

67-72

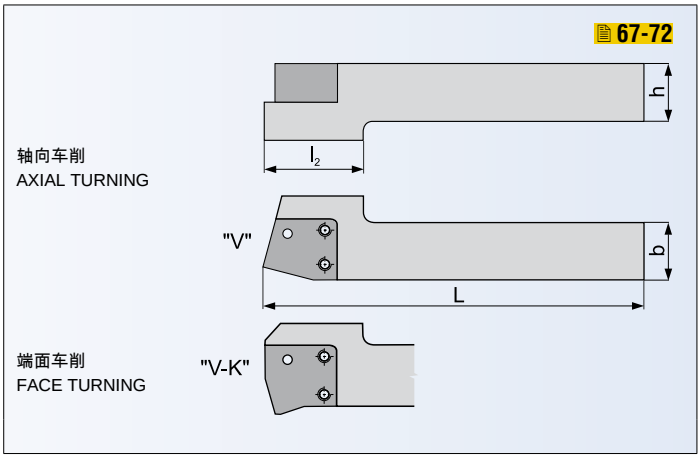

刀柄，用于可调刀夹 / HOLDERS FOR CARTRIDGES

ISO	R/L	尺寸 / Dimensions [mm]										kg	备件 Spare parts	刀片 Inserts
		h	b	L	l_2					λ_s°	γ_o°			
DKR/L 6060 V	● / ●	60	60	398	105					-	-	12.00	DK10	-
DKR/L 6060 V-K	○ / ○	60	60	408	105					-	-	12.30	DK10	-

备件 / SPARE PARTS

类型 Type	螺钉向上 Screw up	螺钉向下 Screw down	扳手 Key	扳手 Key		
DK10	2 x HS 1060	HS 0840	HXK 8	HXK 6		

● 标准库存产品 / Stock Assortiment ○ 非标准库存产品 / Non-stock Assortiment

所有尺寸 / All dimensions [mm]

ISO 代码名称 - 可调式刀头
ISO CODE DESIGNATION - ADJUSTABLE HEADS

1 刀柄 Shank

S	钢制刀杆 Steel shank
A	带冷却液孔的钢制刀柄 Steel shank with coolant hole

2 刀柄 Ø [mm] Shank Ø [mm]

08	10	12	16	20
25	32	40	50	60

3 可调式刀头 Adjustable head

1	2		10	11
A	50	-	160	DSH

1	2		3		4	5	6	7	8	9
A	50	-	SH	-	P	C	L	N	R	16

4 夹紧名称 Clamping designation

C	
P	
M	
S	
X	

5 刀片形状 Insert shape

S	C 80°
T	D 55°
R	K 55°
W 80°	V 35°
L	X 特殊规格 Special

6 刀具类型 - 主偏角 Tool style - cutting edge angle

A 90°	B 75°	C 90°	D 45°	D
E 60°	F 90°	G 90°	H 107°30´	J 93°
K 75°	L 95°	M 50°	N 62°30´	P 117°30´
Q 107°30´	R 75°	S 45°	S	T 60°
U 93°	V 72°30´	W 60°	X 特殊规格 Special	Y 85°
Z κ				

7 后角 Clearance angle

α_n

N	C	P
α_n=0°	α_n=7°	α_n=11°

8 切削方向 Cutting direction

R	
L	

9 切削刃长度 Cutting edge lenght

d [mm]	S	C	D	V	K	W	T	R
6.00								06
6.35		06	07	11			11	
8.00								08
9.525	09	09	11	16	19	06	16	
10.00								10
12.00								12
12.70	12	12	15			08	22	12
15.875	15	16					27	15
16.00								16
19.05	19	19						19
20.00								20
25.00								25
25.40	25	25						25

10 总长 Total lenght

l_1

11 刀头刀柄 Head holder

PRAMET

SH-PCKNR/L

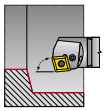

76

SH-PCLNR/L

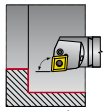

77

SH-PDXNR/L

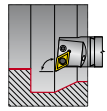

78

SH-PWLNR/L

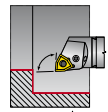

79

DSH

80

SH-PCKNR/L

内孔车削 - 可调式刀头
INTERNAL TURNING - ADJUSTABLE HEADS

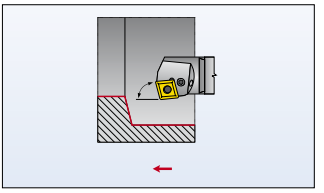

151-155, 227

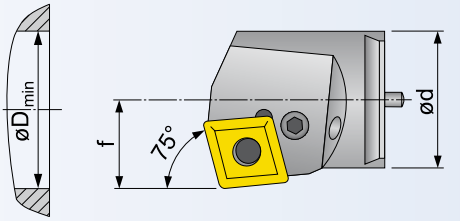

γ_o° - 刀具正前角/ tool orthogonal rake λ_s° - 刀具切削刃倾斜 / tool cutting edge inclination

内孔车削 - 可调式刀头 / INTERNAL TURNING - ADJUSTABLE HEADS

ISO	R/L	尺寸 / Dimensions [mm]										kg	备件 Spare parts	刀片 Inserts
		d	f	D_{min}						λ_s°	γ_o°			
S32-SH-PCKNR/L 12	○ / ○	36	22	46						-12	-6	0.25	PC21	CNM. 1204..
A40-SH-PCKNR/L 12	○ / ○	42	25	52						-12	-6	0.30	PC20	CNM. 1204..
A50-SH-PCKNR/L 12	○ / ○	52	30	62						-12	-6	0.50	PC20	CNM. 1204..
A50-SH-PCKNR/L 19	○ / ○	52	30	62						-12	-6	0.50	PC50	CNM. 1906..
A60-SH-PCKNR/L 12	○ / ○	62	35	72						-12	-6	0.70	PC20	CNM. 1204..
A60-SH-PCKNR/L 19	○ / ○	62	35	72						-12	-6	0.70	PC50	CNM. 1906..

备件 / SPARE PARTS

类型 Type	刀垫 Shim	夹紧杠杆 Clamping lever	夹紧螺钉 Clamp. Screw	管形铆钉 Tubular rivet	安装锥形塞 Mount. taper plug	扳手 Key
PC20	CNU 120312	PU 02	US 35 (M8x22.5)	NT 05	MT 05	HXK 4
PC21	CNU 120312	PU 02	US 41 (M8x17.0)	NT 05	MT 05	HXK 4
PC50	CNU 190416	PU 05	US 38 (M10x29.0)	NT 06	MT 06	HXK 5

● 标准库存产品 / Stock Assortment ○ 非标准库存产品 / Non-stock Assortment 所有尺寸 / All dimensions [mm]

PRAMET

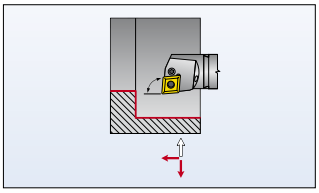

151-155, 227

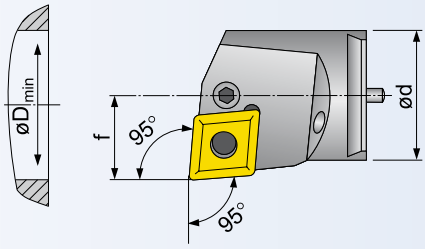

γ_o° - 刀具正前角/ tool orthogonal rake λ_s° - 刀具切削刃倾斜 / tool cutting edge inclination

内孔车削 - 可调式刀头 / INTERNAL TURNING - ADJUSTABLE HEADS

ISO	R/L	尺寸 / Dimensions [mm] d	f	D_{min}						λ_s°	γ_o°	kg	备件 Spare parts	刀片 Inserts
S32-SH-PCLNR/L 12	○ / ○	36	22	46						-12	-6	0.25	PC21	CNM. 1204..
A40-SH-PCLNR/L 12	● / ○	42	25	52						-12	-6	0.30	PC20	CNM. 1204..
A50-SH-PCLNR/L 12	● / ●	52	30	62						-12	-6	0.50	PC20	CNM. 1204..
A50-SH-PCLNR/L 19	○ / ○	52	30	62						-12	-6	0.50	PC50	CNM. 1906..
A60-SH-PCLNR/L 12	○ / ○	62	35	72						-12	-6	0.70	PC20	CNM. 1204..
A60-SH-PCLNR/L 19	● / ○	62	35	72						-12	-6	0.70	PC50	CNM. 1906..

备件 / SPARE PARTS

类型 Type	刀垫 Shim	夹紧杠杆 Clamping lever	夹紧螺钉 Clamp. Screw	管形铆钉 Tubular rivet	安装锥形塞 Mount. taper plug	扳手 Key
PC20	CNU 120312	PU 02	US 35 (M8x22.5)	NT 05	MT 05	HXK 4
PC21	CNU 120312	PU 02	US 41 (M8x17.0)	NT 05	MT 05	HXK 4
PC50	CNU 190416	PU 05	US 38 (M10x29.0)	NT 06	MT 06	HXK 5

● 标准库存产品 / Stock Assortiment ○ 非标准库存产品 / Non-stock Assortiment 所有尺寸 / All dimensions [mm]

SH-PDXNR/L

内孔车削 - 可调式刀头
INTERNAL TURNING - ADJUSTABLE HEADS

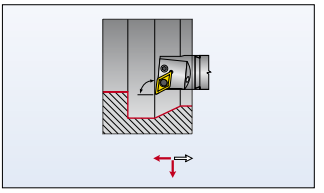

158-161

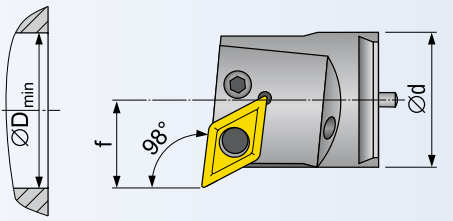

γ_o° - 刀具正前角/ tool orthogonal rake λ_s° - 刀具切削刃倾斜 / tool cutting edge inclination

内孔车削 - 可调式刀头 / INTERNAL TURNING - ADJUSTABLE HEADS

ISO	R/L	尺寸 / Dimensions [mm]										kg	备件 Spare parts	刀片 Inserts
		d	f	D_{min}						λ_s°	γ_o°			
S32-SH-PDXNR/L 15	○ / ○	36	22	46						-12	-6	0.25	PD33	DNM. 1504..
A40-SH-PDXNR/L 15	● / ○	42	25	52						-12	-6	0.30	PD30	DNM. 1504..
A50-SH-PDXNR/L 15	● / ○	52	30	62						-12	-6	0.50	PD30	DNM. 1504..
A60-SH-PDXNR/L 15	○ / ○	62	35	72						-12	-6	0.70	PD30	DNM. 1504..

备件 / SPARE PARTS

类型 Type	刀垫 Shim	夹紧杠杆 Clamping lever	夹紧螺钉 Clamp. Screw	管形铆钉 Tubular rivet	安装锥形塞 Mount. taper plug	扳手 Key
PD30	DNU 150308	PU 03	US 36 (M8x26.0)	NT 05	MT 05	HXK 4
PD33	-	PU 03-A	US 41 (M8x17.0)	NT 15	MT 05	HXK 4

● 标准库存产品 / Stock Assortiment ○ 非标准库存产品 / Non-stock Assortiment 所有尺寸 / All dimensions [mm]

PRAMET

SH-PWLNR/L

内孔车削 - 可调式刀头
INTERNAL TURNING - ADJUSTABLE HEADS

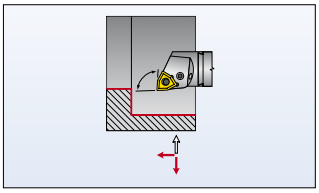

192-195

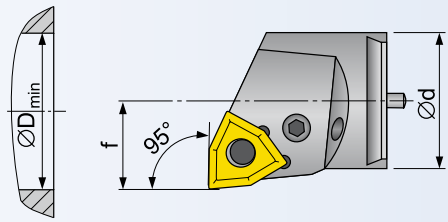

γ_o° - 刀具正前角/ tool orthogonal rake λ_s° - 刀具切削刃倾斜 / tool cutting edge inclination

内孔车削 - 可调式刀头 / INTERNAL TURNING - ADJUSTABLE HEADS

ISO	R/L	尺寸 / Dimensions [mm]										kg	备件 Spare parts	刀片 Inserts
		d	f	D_{min}						λ_s°	γ_o°			
S32-SH-PWLNR/L 08	○ / ○	36	22	46						-12	-6	0.25	PW20	WNM. 0804..
A40-SH-PWLNR/L 08	○ / ○	42	25	52						-12	-6	0.30	PW20	WNM. 0804..
A50-SH-PWLNR/L 08	● / ○	52	30	62						-12	-6	0.50	PW20	WNM. 0804..
A60-SH-PWLNR/L 08	○ / ○	62	35	72						-12	-6	0.70	PW20	WNM. 0804..

备件 / SPARE PARTS

类型 Type	刀垫 Shim	夹紧杠杆 Clamping lever	夹紧螺钉 Clamp. Screw	管形铆钉 Tubular rivet	安装锥形塞 Mount. taper plug	扳手 Key
PW20	WNU 080312	PU 02	US 35 (M8x22.5)	NT 05	MT 05	HXK 4

● 标准库存产品 / Stock Assortiment ○ 非标准库存产品 / Non-stock Assortiment 所有尺寸 / All dimensions [mm]

DSH

内孔车削 - 可调式刀头
INTERNAL TURNING - ADJUSTABLE HEADS

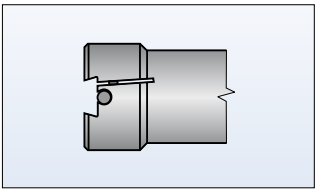

76-79

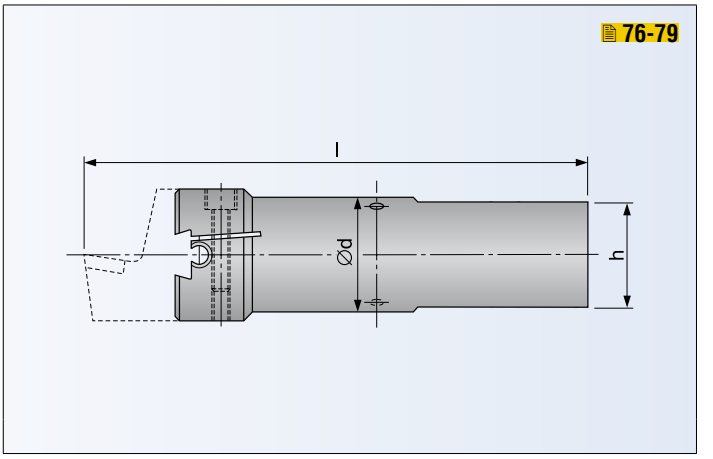

刀柄，用于可调式刀头 / HOLDER FOR ADJUSTABLE HEADS

ISO		尺寸 / Dimensions [mm]										kg	备件 Spare parts	刀片 Inserts
		d	l	h										
S32-160-DSH	○	32	160	29								1.20	D32	-
S32-210-DSH	○	32	210	29								1.40	D32	-
S32-260-DSH	○	32	260	29								1.60	D32	-
A40-160-DSH	○	40	160	37								2.50	D40	-
A40-210-DSH	○	40	210	37								2.90	D40	-
A40-260-DSH	●	40	260	37								3.30	D40	-
A50-230-DSH	●	50	230	46								4.70	D50	-
A50-280-DSH	●	50	280	46								5.20	D50	-
A50-330-DSH	○	50	330	46								5.70	D50	-
A60-200-DSH	○	60	200	54								8.00	D50	-
A60-300-DSH	○	60	300	54								8.70	D50	-
A60-400-DSH	○	60	400	54								9.40	D50	-

备件 / SPARE PARTS

类型 Type	夹紧螺钉 Clamping screw	可调式螺钉 Adjustable srew ČSN021187	扳手 Key	扳手 Key		
D32	HS 0825	M6x10	HXK 6	HXK 3		
D40	HS 0830	M6x15	HXK 6	HXK 3		
D50	HS 0835	M8x20	HXK 6	HXK 4		

● 标准库存产品 / Stock Assortiment ○ 非标准库存产品 / Non-stock Assortiment 所有尺寸 / All dimensions [mm]

PRAMET

SCACR/L

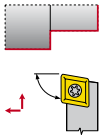

82

SCBCR/L

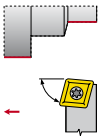

83

SCFCR/L

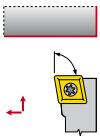

84

SCLCR/L

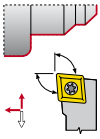

85

SDJCR/L

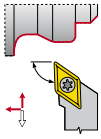

86

SDNCN

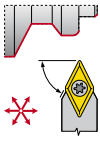

87

SRDCN

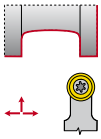

88

SRSCR/L

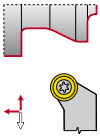

89

SSBCR/L

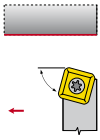

90

SSDCN

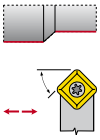

91

SSKCR/L

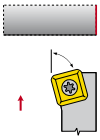

92

STFCR/L

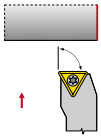

93

STJCR/L

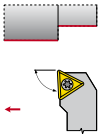

94

SVHCR/L

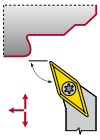

95

SVJCR/L

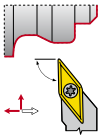

96

SVPCR/L

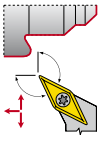

97

SVVCN

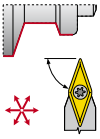

98

SVXCR/L

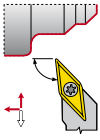

99

SWLCR/L

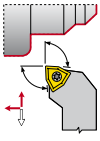

100

SCACR/L

外圆车削 - ISO S
EXTERNAL TURNING - ISO S

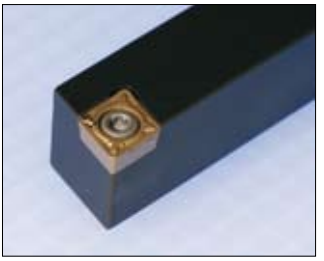

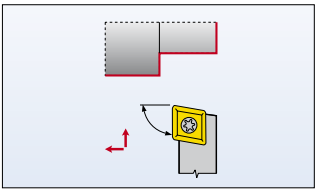

149-151

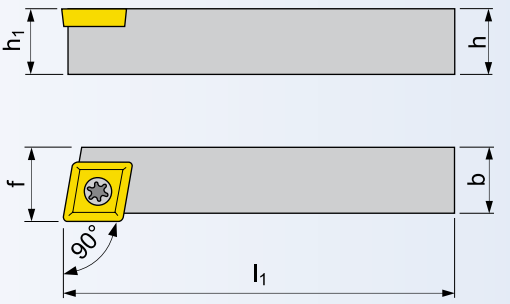

γ_o° - 刀具正前角/ tool orthogonal rake λ_s° - 刀具切削刃倾斜 / tool cutting edge inclination

刀具，用于外圆车削 / TOOL FOR EXTERNAL TURNING

ISO	R/L	尺寸 / Dimensions [mm]										kg	备件 Spare parts	刀片 Inserts
		$h=h_1$	b	f	l_1					λ_s°	γ_o°			
SCACR/L 0808 D 06	○ / ○	8	8	8.5	60					0	0	0.04	SO1	CC.. 0602..
SCACR/L 1010 E 06	● / ●	10	10	10.5	70					0	0	0.06	SO1	CC.. 0602..
SCACR/L 1212 F 09	● / ●	12	12	12.5	80					0	0	0.10	SO8	CC.. 09T3..
SCACR/L 1616 H 09	● / ●	16	16	16.5	100					0	0	0.22	SO8	CC.. 09T3..

备件 / SPARE PARTS

类型 Type	夹紧螺钉 Clamping screw	螺纹 Thread	刀垫 Shim	刀垫螺钉 Shim screw	螺丝刀 Screwdriver	扳手 Key
SO1	US 2506-T07P	(M2.5x6.3)	-	-	SDR T07P	-
SO8	US 3510-T15P	(M3.5x10.4)	-	-	SDR T15P	-

● 标准库存产品 / Stock Assortment ○ 非标准库存产品 / Non-stock Assortment 所有尺寸 / All dimensions [mm]

PRAMET

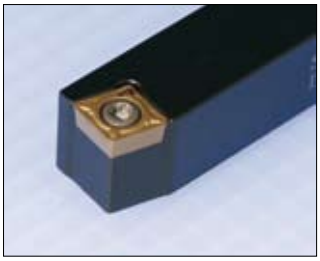

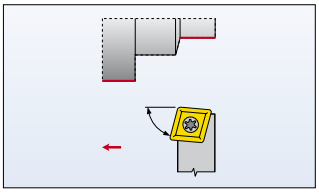

149-151

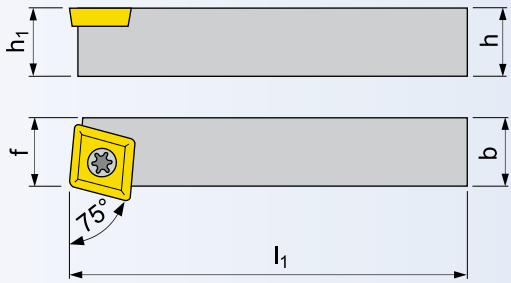

γ_o° - 刀具正前角/ tool orthogonal rake λ_s° - 刀具切削刃倾斜 / tool cutting edge inclination

刀具，用于外圆车削 / TOOL FOR EXTERNAL TURNING

ISO	R/L	尺寸 / Dimensions [mm]										kg	备件 Spare parts	刀片 Inserts
		h=h1	b	f	l1					λs°	γo°			
SCBCR/L 1212 F 09	○ / ○	12	12	11	80					0	0	0.10	SO8	CC.. 09T3..
SCBCR/L 1616 H 09	● / ○	16	16	13	100					0	0	0.20	SO8	CC.. 09T3..
SCBCR/L 2020 K 12-M-A	○ / ○	20	20	17	125					0	0	0.40	SC20	CC.. 1204..
SCBCR/L 2525 M 12-M-A	● / ●	25	25	22	150					0	0	0.75	SC20	CC.. 1204..

备件 / SPARE PARTS

类型 Type	夹紧螺钉 Clamping screw	螺纹 Thread	刀垫 Shim	刀垫螺钉 Shim screw	螺丝刀 Screwdriver	扳手 Key
SO8	US 3510-T15P	(M3.5x10.4)	-	-	SDR T15P	-
SC20	US 5012-T15P	(M5x12.0)	SCN120304	MS 5008	SDR T15P	HXK 5

● 标准库存产品 / Stock Assortiment ○ 非标准库存产品 / Non-stock Assortiment 所有尺寸 / All dimensions [mm]

SCFCR/L

外圆车削 - ISO S
EXTERNAL TURNING - ISO S

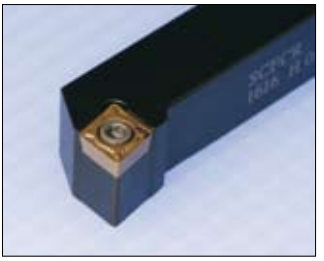

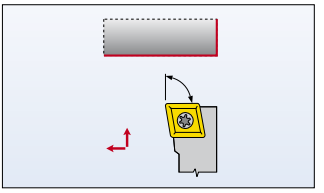

149-151

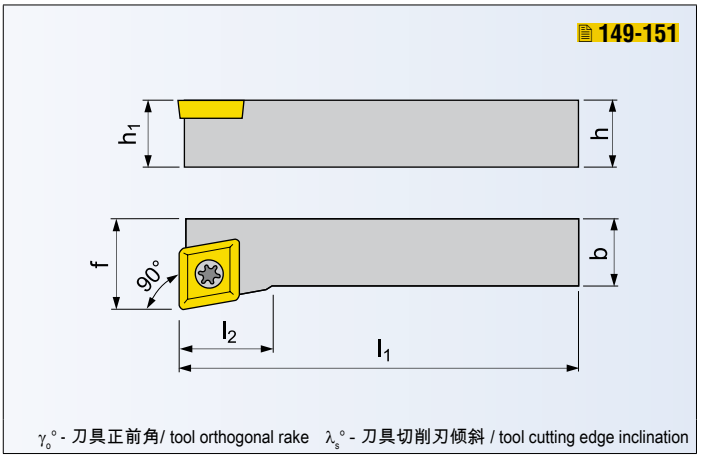

刀具，用于外圆车削 / TOOL FOR EXTERNAL TURNING

ISO	R/L	尺寸 / Dimensions [mm]										kg	备件 Spare parts	刀片 Inserts
		$h=h_1$	b	f	l_1	l_{2max}				$\lambda_s°$	$\gamma_o°$			
SCFCR/L 0808 D 06	○ / ○	8	8	10	60	8				0	0	0.04	SO1	CC.. 0602..
SCFCR/L 1010 E 06	● / ○	10	10	12	70	8				0	0	0.06	SO1	CC.. 0602..
SCFCR/L 1212 F 09	● / ○	12	12	16	80	16				0	0	0.10	SO8	CC.. 09T3..
SCFCR/L 1616 H 09	● / ●	16	16	20	100	16				0	0	0.22	SO8	CC.. 09T3..

备件 / SPARE PARTS

类型 Type	夹紧螺钉 Clamping screw	螺纹 Thread	刀垫 Shim	刀垫螺钉 Shim screw	螺丝刀 Screwdriver	扳手 Key
SO1	US 2506-T07P	(M2.5x6.3)	-	-	SDR T07P	-
SO8	US 3510-T15P	(M3.5x10.4)	-	-	SDR T15P	-

● 标准库存产品 / Stock Assortiment ○ 非标准库存产品 / Non-stock Assortiment

所有尺寸 / All dimensions [mm]

PRAMET

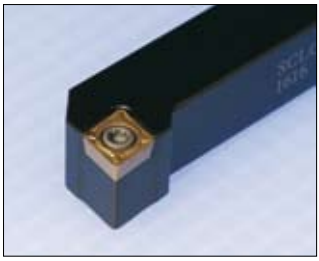

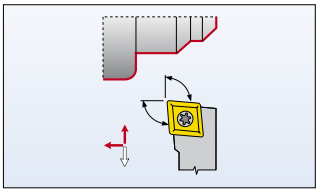

149-151

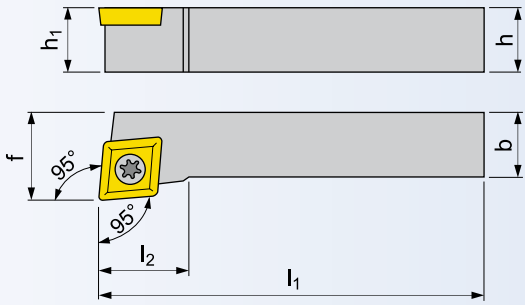

γ_o° - 刀具正前角/ tool orthogonal rake λ_s° - 刀具切削刃倾斜 / tool cutting edge inclination

刀具，用于外圆车削 / TOOL FOR EXTERNAL TURNING

ISO	R/L	尺寸 / Dimensions [mm]										kg	备件 Spare parts	刀片 Inserts
		h=h1	b	f	l1	l2max				λs°	γo°			
SCLCR/L 0808 D 06	● / ○	8	8	10	60	11				0	0	0.04	SO1	CC.. 0602..
SCLCR/L 1010 E 06	● / ●	10	10	12	70	11				0	0	0.06	SO1	CC.. 0602..
SCLCR/L 1212 F 09	● / ●	12	12	16	80	16				0	0	0.10	SO8	CC.. 09T3..
SCLCR/L 1616 H 09	● / ●	16	16	20	100	16				0	0	0.22	SO8	CC.. 09T3..
SCLCR/L 2020 K 12-M-A	● / ●	20	20	25	125	20				0	0	0.42	SC20	CC.. 1204..
SCLCR/L 2525 M 12-M-A	● / ●	25	25	32	150	20				0	0	0.68	SC20	CC.. 1204..

备件 / SPARE PARTS

类型 Type	夹紧螺钉 Clamping screw	螺纹 Thread	刀垫 Shim	刀垫螺钉 Shim screw	螺丝刀 Screwdriver	扳手 Key
SO1	US 2506-T07P	(M2.5x6.3)	-	-	SDR T07P	-
SO8	US 3510-T15P	(M3.5x10.4)	-	-	SDR T15P	-
SC20	US 5012-T15P	(M5x12.0)	SCN 120304	MS 5008	SDR T15P	HXK 5

● 标准库存产品 / Stock Assortiment ○ 非标准库存产品 / Non-stock Assortiment 所有尺寸 / All dimensions [mm]

SDJCR/L

外圆车削 - ISO S
EXTERNAL TURNING - ISO S

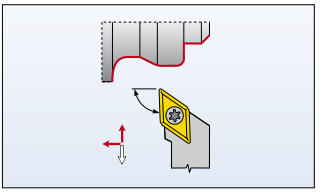

156-158, 227

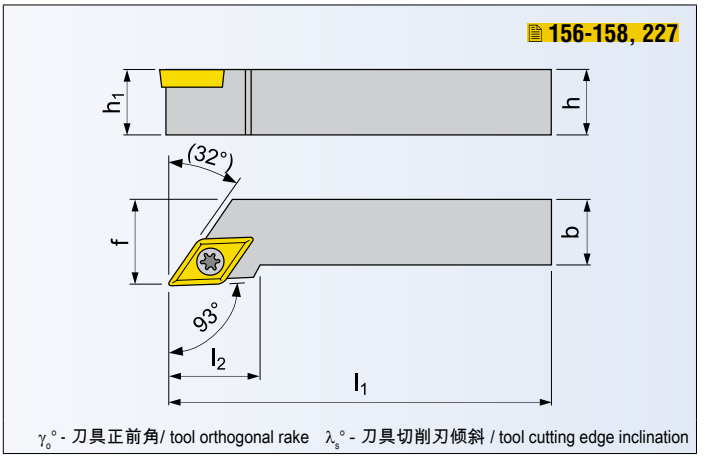

γ_o° - 刀具正前角/ tool orthogonal rake λ_s° - 刀具切削刃倾斜 / tool cutting edge inclination

刀具，用于外圆车削 / TOOL FOR EXTERNAL TURNING

ISO	R/L	尺寸 / Dimensions [mm]										kg	备件 Spare parts	刀片 Inserts
		$h=h_1$	b	f	l_1	l_{2max}				λ_s°	γ_o°			
SDJCR/L 0808 D 07	○ / ○	8	8	10	60	14				0	0	0.04	SO1	DC.. 0702..
SDJCR/L 1010 E 07	● / ●	10	10	12	70	14				0	0	0.06	SO1	DC.. 0702..
SDJCR/L 1212 F 07	● / ●	12	12	16	80	14				0	0	0.10	SO1	DC.. 0702..
SDJCR/L 1212 F 11	● / ●	12	12	16	80	20				0	0	0.10	SO8	DC.. 11T3..
SDJCR/L 1616 H 11	● / ●	16	16	20	100	20				0	0	0.20	SO8	DC.. 11T3..
SDJCR/L 2020 K 11-M-A	● / ●	20	20	25	125	20				0	0	0.40	SD10	DC.. 11T3..
SDJCR/L 2525 M 11-M-A	● / ●	25	25	32	150	20				0	0	0.75	SD10	DC.. 11T3..

备件 / SPARE PARTS

类型 Type	夹紧螺钉 Clamping screw	螺纹 Thread	刀垫 Shim	刀垫螺钉 Shim screw	螺丝刀 Screwdriver	扳手 Key
SO1	US 2506-T07P	(M2.5x6.3)	-	-	SDR T07P	-
SO8	US 3510-T15P	(M3.5x10.4)	-	-	SDR T15P	-
SD10	US 3510-T15P	(M3.5x10.4)	SDN 110304	MS 3510	SDR T15P	HXK 3.5

● 标准库存产品 / Stock Assortiment ○ 非标准库存产品 / Non-stock Assortiment 所有尺寸 / All dimensions [mm]

PRAMET

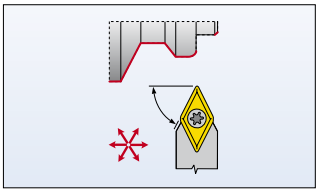

156-158, 227

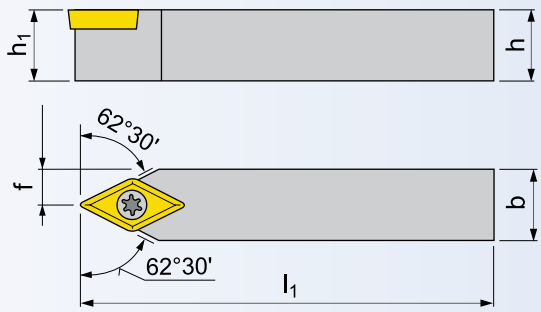

γ_o° - 刀具正前角/ tool orthogonal rake λ_s° - 刀具切削刃倾斜 / tool cutting edge inclination

刀具，用于外圆车削 / TOOL FOR EXTERNAL TURNING

ISO		尺寸 / Dimensions [mm]										kg	备件 Spare parts	刀片 Inserts
		h=h1	b	f	l1					λs°	γo°			
SDNCN 0808 D 07	●	8	8	4	60					0	0	0.04	SO1	DC.. 0702..
SDNCN 1010 E 07	●	10	10	5	70					0	0	0.06	SO1	DC.. 0702..
SDNCN 1212 F 07	●	12	12	6	80					0	0	0.08	SO1	DC.. 0702..
SDNCN 1212 F 11	●	12	12	6	80					0	0	0.08	SO8	DC.. 11T3..
SDNCN 1616 H 11	●	16	16	8	100					0	0	0.18	SO8	DC.. 11T3..
SDNCN 2020 K 11-M-A	●	20	20	10	125					0	0	0.35	SD10	DC.. 11T3..
SDNCN 2525 M 11-M-A	●	25	25	12.5	150					0	0	0.70	SD10	DC.. 11T3..

备件 / SPARE PARTS

类型 Type	夹紧螺钉 Clamping screw	螺纹 Thread	刀垫 Shim	刀垫螺钉 Shim screw	螺丝刀 Screwdriver	扳手 Key
SO1	US 2506-T07P	(M2.5x6.3)	-	-	SDR T07P	-
SO8	US 3510-T15P	(M3.5x10.4)	-	-	SDR T15P	-
SD10	US 3510-T15P	(M3.5x10.4)	SDN 110304	MS 3510	SDR T15P	HXK 3.5

● 标准库存产品 / Stock Assortment ○ 非标准库存产品 / Non-stock Assortment 所有尺寸 / All dimensions [mm]

SRDCN

外圆车削 - ISO S
EXTERNAL TURNING - ISO S

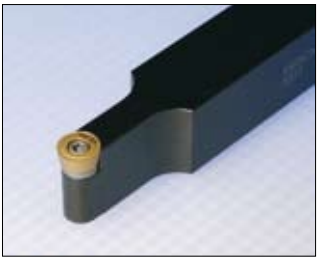

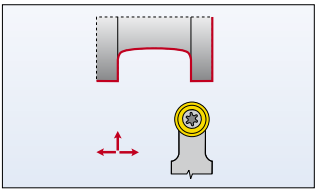

165-168

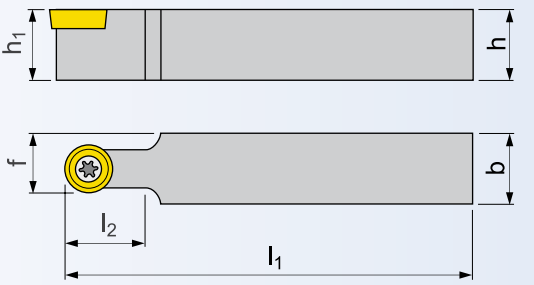

γ_o° - 刀具正前角/ tool orthogonal rake λ_s° - 刀具切削刃倾斜 / tool cutting edge inclination

刀具，用于外圆车削 / TOOL FOR EXTERNAL TURNING

ISO		尺寸 / Dimensions [mm]										kg	备件 Spare parts	刀片 Inserts
		h=h1	b	f	l1	l2max				λs°	γo°			
SRDCN 1212 F 06	●	12	12	9	80	12				0	0	0.10	SO1	RC.. 0602MO
SRDCN 1616 H 06	●	16	16	11	100	12				0	0	0.20	SO1	RC.. 0602MO
SRDCN 2020 K 08	●	20	20	14	125	20				0	0	0.40	SO3	RC.. 0803MO
SRDCN 2020 K 1003-M-A	●	20	20	15	125	25				0	0	0.40	SR10	RC.. 1003MO
SRDCN 2020 K 10-M-A	●	20	20	15	125	25				0	0	0.40	SR10	RC.. 10T3MO
SRDCN 2525 M 10-M-A	●	25	25	17.5	150	25				0	0	0.70	SR10	RC.. 10T3MO
SRDCN 2525 M 12-M-A	●	25	25	18.5	150	30				0	0	0.70	SR12	RC.. 1204MO
SRDCN 3225 P 10-M	●	32	25	17.5	170	25				0	0	0.90	SR10	RC.. 10T3MO
SRDCN 3225 P 12-M	●	32	25	18.5	170	30				0	0	0.90	SR12	RC.. 1204MO
SRDCN 3225 P 16-M	●	32	25	20.5	170	32				0	0	1.00	SR16	RC.. 1606MO

备件 / SPARE PARTS

类型 Type	夹紧螺钉 Clamping screw	螺纹 Thread	刀垫 Shim	刀垫螺钉 Shim screw	螺丝刀 Screwdriver	扳手 Key
SO1	US 2506-T07P	(M2.5x6.3)	-	-	SDR T07P	-
SO3	US 3007-T09P	(M3.0x7.5)	-	-	SDR T09P	-
SR10	US 3510-T15P	(M3.5x10.4)	SRN 100300	MS 3510	SDR T15P	HXK 3.5
SR12	US 3510-T15P	(M3.5x10.4)	SRN 120300	MS 3510	SDR T15P	HXK 3.5
SR16	US 5018-T20P	(M5x18)	SRN 16T3M0	MS 5015	SDR T20P	HXK 5

● 标准库存产品 / Stock Assortment ○ 非标准库存产品 / Non-stock Assortment 所有尺寸 / All dimensions [mm]

PRAMET

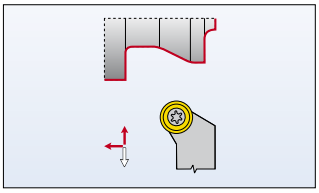

165-168

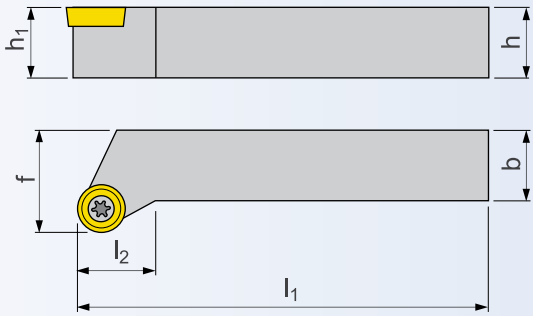

γ_o° - 刀具正前角/ tool orthogonal rake λ_s° - 刀具切削刃倾斜 / tool cutting edge inclination

刀具，用于外圆车削 / TOOL FOR EXTERNAL TURNING

ISO	R/L	尺寸 / Dimensions [mm]										kg	备件 Spare parts	刀片 Inserts
		h=h_1	b	f	l_1	l_{2max}				λ_s°	γ_o°			
SRSCR/L 1212 F 06	○ / ○	12	12	16	80	12				0	0	0.10	SO1	RC.. 0602MO
SRSCR/L 1616 H 06	● / ●	16	16	20	100	12				0	0	0.22	SO1	RC.. 0602MO
SRSCR/L 2020 K 08	● / ●	20	20	25	125	20				0	0	0.45	SO3	RC.. 0803MO
SRSCR/L 2020 K 10-M-A	● / ●	20	20	25	125	20				0	0	0.45	SR10	RC.. 10T3MO
SRSCR/L 2525 M 10-M-A	● / ●	25	25	32	170	20				0	0	0.75	SR10	RC.. 10T3MO
SRSCR/L 2525 M 12-M-A	● / ●	25	25	32	150	20				0	0	0.75	SR12	RC.. 1204MO
SRSCR/L 3225 P 10-M	● / ○	32	25	32	170	20				0	0	1.00	SR10	RC.. 10T3MO
SRSCR/L 3225 P 12-M	○ / ○	32	25	32	170	20				0	0	1.00	SR12	RC.. 1204MO
SRSCR/L 3225 P 16-M	● / ●	32	25	32	170	20				0	0	1.10	SR16	RC.. 1606MO

备件 / SPARE PARTS

类型 Type	夹紧螺钉 Clamping screw	螺纹 Thread	刀垫 Shim	刀垫螺钉 Shim screw	螺丝刀 Screwdriver	扳手 Key
SO1	US 2506-T07P	(M2.5x6.3)	-	-	SDR T07P	-
SO3	US 3007-T09P	(M3.0x7.5)	-	-	SDR T09P	-
SR10	US 3510-T15P	(M3.5x10.4)	SRN 100300	MS 3510	SDR T15P	HXK 3.5
SR12	US 3510-T15P	(M3.5x10.4)	SRN 120300	MS 3510	SDR T15P	HXK 3.5
SR16	US 5018-T20P	(M5x18)	SRN 16T3M0	MS 5015	SDR T20P	HXK 5

● 标准库存产品 / Stock Assortment ○ 非标准库存产品 / Non-stock Assortment 所有尺寸 / All dimensions [mm]

SSBCR/L

外圆车削 - ISO S
EXTERNAL TURNING - ISO S

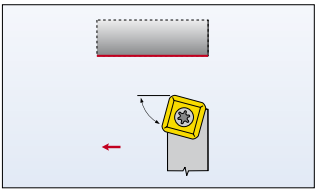

171-173

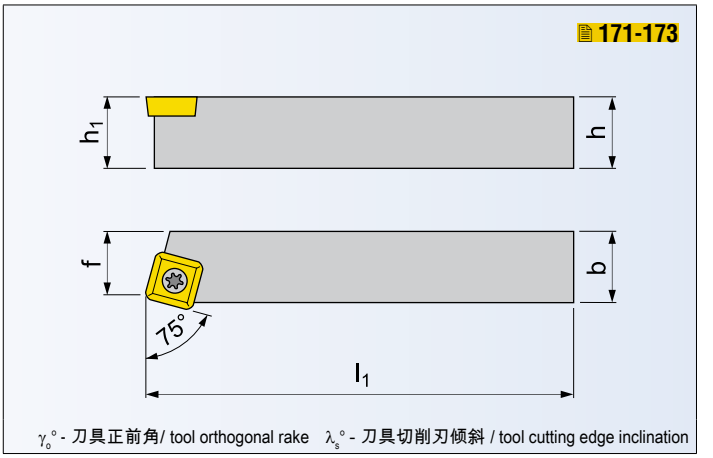

刀具，用于外圆车削 / TOOL FOR EXTERNAL TURNING

ISO	R/L	尺寸 / Dimensions [mm]										kg	备件 Spare parts	刀片 Inserts
		h=h1	b	f	l1					λs°	γo°			
SSBCR/L 1212 F 09	○ / ●	12	12	11	80					0	0	0.10	SO8	SC.. 09T3..
SSBCR/L 1616 H 09	● / ●	16	16	13	100					0	0	0.20	SO8	SC.. 09T3..
SSBCR/L 2020 K 12-M-A	● / ●	20	20	17	125					0	0	0.40	SS20	SC.. 1204..
SSBCR/L 2525 M 12-M-A	● / ●	25	25	22	150					0	0	0.75	SS20	SC.. 1204..
SSBCR/L 4040 S 25	● / ●	40	40	35	250					0	0	3.10	SS25	SC.. 2509..
SSBCR/L 5050 T 25	○ / ○	50	50	43	300					0	0	5.80	SS25	SC.. 2509..
SSBCR/L 5050 T 38	● / ●	50	50	43	300					0	0	5.80	SS38	SC.. 3809..
SSBCR/L 6060 V 38	● / ●	60	60	53	400					0	0	10.80	SS38	SC.. 3809..

备件 / SPARE PARTS

类型 Type	夹紧螺钉 Clamping screw	螺纹 Thread	刀垫 Shim	刀垫螺钉 Shim screw	螺丝刀 Screwdriver	扳手 Key
SO8	US 3510-T15P	(M3.5x10.4)	-	-	SDR T15P	-
SS20	US 5012-T15P	(M5x12.0)	SSN 120304	MS 5008	SDR T15P	HXK 5
SS25	US 8025-T30P	(M8x25.0)	SSN 250620	MS 8020	SDR T30P	HXK 5
SS38	US 8025-T30P	(M8x25.0)	SSN 380620	MS 8020	SDR T30P	HXK 5

● 标准库存产品 / Stock Assortiment ○ 非标准库存产品 / Non-stock Assortiment 所有尺寸 / All dimensions [mm]

PRAMET

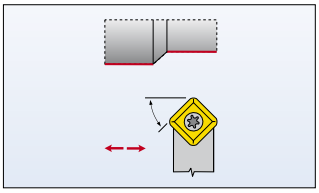

171-173

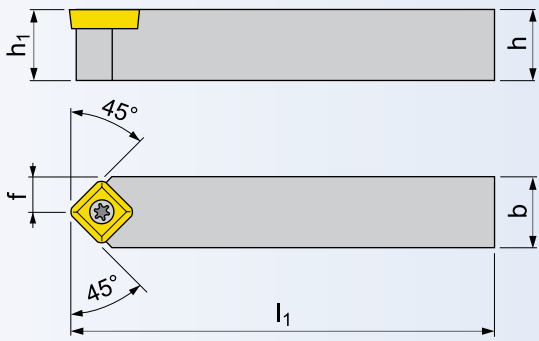

γ_o° - 刀具正前角/ tool orthogonal rake λ_s° - 刀具切削刃倾斜 / tool cutting edge inclination

刀具，用于外圆车削 / TOOL FOR EXTERNAL TURNING

ISO		尺寸 / Dimensions [mm]										kg	备件 Spare parts	刀片 Inserts
		h=h1	b	f	l1					λs°	γo°			
SSDCN 1212 F 09	●	12	12	6	80					0	0	0.10	SO8	SC.. 09T3..
SSDCN 1616 H 09	●	16	16	8	100					0	0	0.20	SO8	SC.. 09T3..
SSDCN 2020 K 12-M-A	●	20	20	10	125					0	0	0.40	SS20	SC.. 1204..
SSDCN 2525 M 12-M-A	●	25	25	12.5	150					0	0	0.75	SS20	SC.. 1204..

备件 / SPARE PARTS

类型 Type	夹紧螺钉 Clamping screw	螺纹 Thread	刀垫 Shim	刀垫螺钉 Shim screw	螺丝刀 Screwdriver	扳手 Key
SO8	US 3510-T15P	(M3.5x10.4)	-	-	SDR T15P	-
SS20	US 5012-T15P	(M5x12.0)	SSN 120304	MS 5008	SDR T15P	HXK 5

● 标准库存产品 / Stock Assortiment ○ 非标准库存产品 / Non-stock Assortiment 所有尺寸 / All dimensions [mm]

SSKCR/L

外圆车削 - ISO S
EXTERNAL TURNING - ISO S

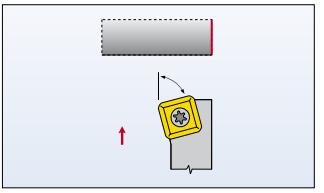

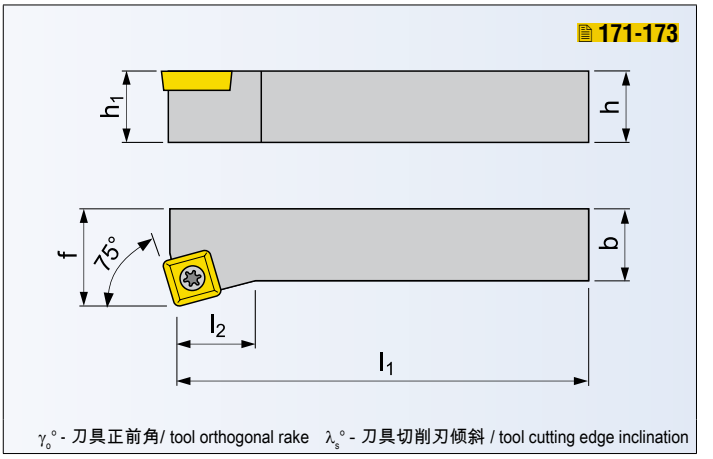

刀具，用于外圆车削 / TOOL FOR EXTERNAL TURNING

ISO	R/L	尺寸 / Dimensions [mm]										kg	备件 Spare parts	刀片 Inserts
		$h=h_1$	b	f	l_1	l_{2max}				$\lambda_s°$	$\gamma_o°$			
SSKCR/L 1212 F 09	○ / ○	12	12	16	80	32				0	0	0.10	SO8	SC.. 09T3..
SSKCR/L 1616 H 09	● / ○	16	16	20	100	32				0	0	0.20	SO8	SC.. 09T3..
SSKCR/L 2020 K 12-M-A	● / ○	20	20	25	125	36				0	0	0.40	SS20	SC.. 1204..
SSKCR/L 2525 M 12-M-A	○ / ○	25	25	32	150	36				0	0	0.75	SS20	SC.. 1204..
SSKCR/L 4040 S 25	○ / ○	40	40	50	250					0	0	3.10	SS25	SC.. 2509..
SSKCR/L 5050 T 25	○ / ○	50	50	60	300					0	0	5.80	SS25	SC.. 2509..
SSKCR/L 5050 T 38	○ / ○	50	50	65	300					0	0	5.80	SS38	SC.. 3809..
SSKCR/L 6060 V 38	○ / ○	60	60	75	400					0	0	11.50	SS38	SC.. 3809..

备件 / SPARE PARTS

类型 Type	夹紧螺钉 Clamping screw	螺纹 Thread	刀垫 Shim	刀垫螺钉 Shim screw	螺丝刀 Screwdriver	扳手 Key
SO8	US 3510-T15P	(M3.5x10.4)	-	-	SDR T15P	-
SS20	US 5012-T15P	(M5x12.0)	SSN 120304	MS 5008	SDR T15P	HXK 5
SS25	US 8025-T30P	(M8x25.0)	SSN 250620	MS 8020	SDR T30P	HXK 5
SS38	US 8025-T30P	(M8x25.0)	SSN 380620	MS 8020	SDR T30P	HXK 5

● 标准库存产品 / Stock Assortment ○ 非标准库存产品 / Non-stock Assortment 所有尺寸 / All dimensions [mm]

PRAMET

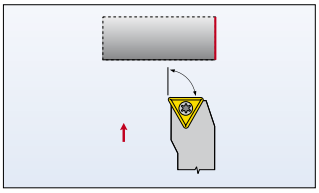

179-181

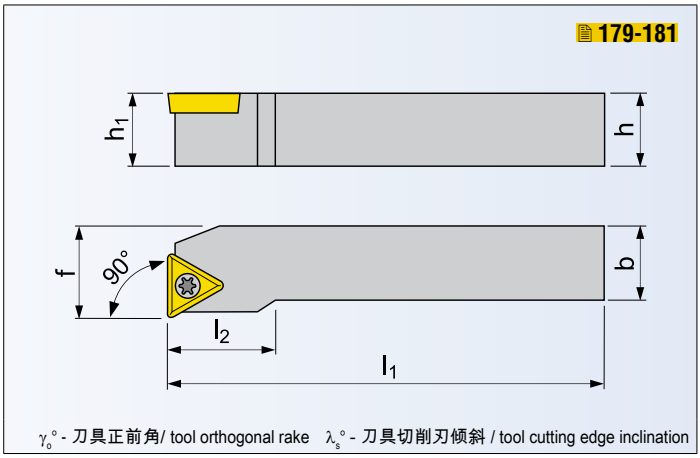

刀具，用于外圆车削 / TOOL FOR EXTERNAL TURNING

ISO	R/L	尺寸 / Dimensions [mm]										kg	备件 Spare parts	刀片 Inserts
		$h=h_1$	b	f	l_1	l_{2max}				$\lambda_s°$	$\gamma_o°$			
STFCR/L 1616 H 11	● / ○	16	16	20	100	18				0	0	0.22	SO1	TC.. 1102..
STFCR/L 2020 K 16-M-A	● / ○	20	20	25	125	25				0	0	0.40	ST10	TC.. 16T3..
STFCR/L 2525 M 16-M-A	● / ○	25	25	32	150	25				0	0	0.75	ST10	TC.. 16T3..

备件 / SPARE PARTS

类型 Type	夹紧螺钉 Clamping screw	螺纹 Thread	刀垫 Shim	刀垫螺钉 Shim screw	螺丝刀 Screwdriver	扳手 Key
SO1	US 2506-T07P	(M2.5x6.3)	-	-	SDR T07P	-
ST10	US 3510-T15P	(M3.5x10.4)	STN 160308	MS 3510	SDR T15P	HXK 3.5

● 标准库存产品 / Stock Assortiment ○ 非标准库存产品 / Non-stock Assortiment 所有尺寸 / All dimensions [mm]

STJCR/L

外圆车削 - ISO S
EXTERNAL TURNING - ISO S

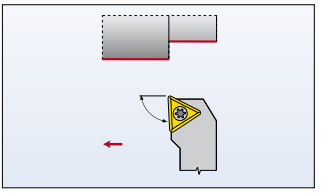

179-181

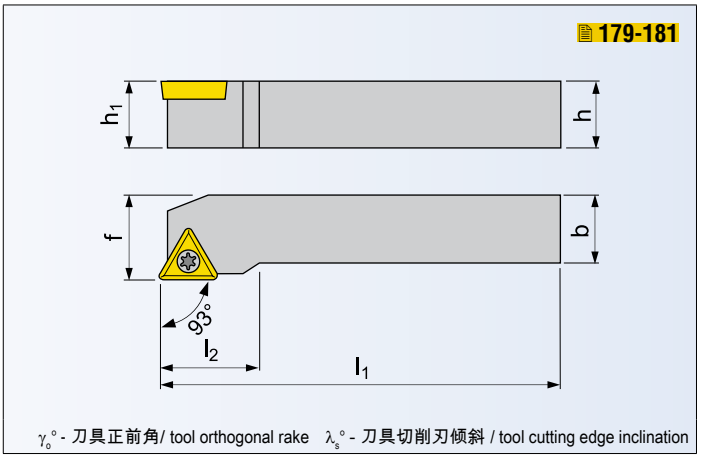

刀具，用于外圆车削 / TOOL FOR EXTERNAL TURNING

ISO	R/L	尺寸 / Dimensions [mm]										kg	备件 Spare parts	刀片 Inserts
		h=h1	b	f	l1	l2max				λs°	γo°			
STJCR/L 1616 H 11	● / ●	16	16	20	100	18				0	0	0.22	SO1	TC.. 1102..
STJCR/L 2020 K 16-M-A	● / ○	20	20	25	125	25				0	0	0.40	ST10	TC.. 16T3..
STJCR/L 2525 M 16-M-A	● / ●	25	25	32	150	25				0	0	0.75	ST10	TC.. 16T3..

备件 / SPARE PARTS

类型 Type	夹紧螺钉 Clamping screw	螺纹 Thread	刀垫 Shim	刀垫螺钉 Shim screw	螺丝刀 Screwdriver	扳手 Key
SO1	US 2506-T07P	(M2.5x6.3)	-	-	SDR T07P	-
ST10	US 3510-T15P	(M3.5x10.4)	STN 160308	MS 3510	SDR T15P	HXK 3.5

● 标准库存产品 / Stock Assortment ○ 非标准库存产品 / Non-stock Assortment

所有尺寸 / All dimensions [mm]

PRAMET

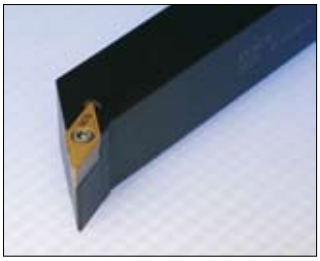

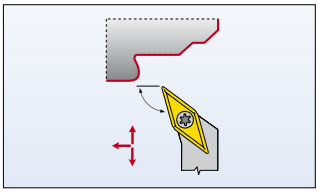

186-188, 228

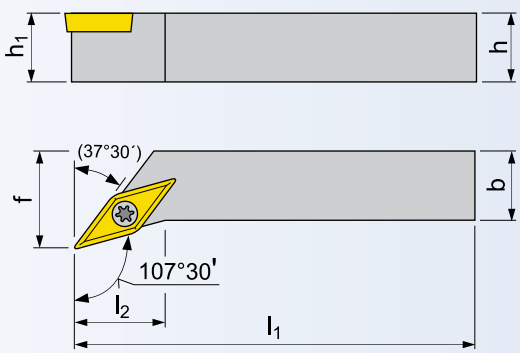

γ_o° - 刀具正前角/ tool orthogonal rake λ_s° - 刀具切削刃倾斜 / tool cutting edge inclination

刀具，用于外圆车削 / TOOL FOR EXTERNAL TURNING

ISO	R/L	尺寸 / Dimensions [mm]										kg	备件 Spare parts	刀片 Inserts
		$h=h_1$	b	f	l_1	l_{2max}				λ_s°	γ_o°			
SVHCR/L 1616 H 11	● / ●	16	16	20	100	14				0	0	0.20	SO1	VC.. 1103..
SVHCR/L 2020 K 16-M-A	● / ●	20	20	25	125	20				0	0	0.40	SV10	VB.. 1604..; VC.. 1604..
SVHCR/L 2525 M 16-M-A	● / ●	25	25	32	150	20				0	0	0.68	SV10	VB.. 1604..; VC.. 1604..

备件 / SPARE PARTS

类型 Type	夹紧螺钉 Clamping screw	螺纹 Thread	刀垫 Shim	刀垫螺钉 Shim screw	螺丝刀 Screwdriver	扳手 Key
SO1	US 2506-T07P	(M2.5x6.3)	-	-	SDR T07P	-
SV10	US 3512-T15P	(M3.5x12.5)	SVN 160304	MS 3510	SDR T15P	HXK 3.5

● 标准库存产品 / Stock Assortment ○ 非标准库存产品 / Non-stock Assortment 所有尺寸 / All dimensions [mm]

SVJCR/L

外圆车削 - ISO S
EXTERNAL TURNING - ISO S

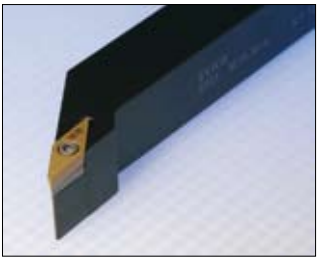

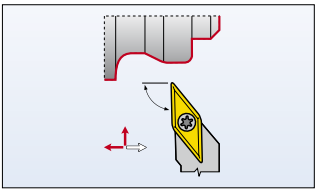

186-188, 228

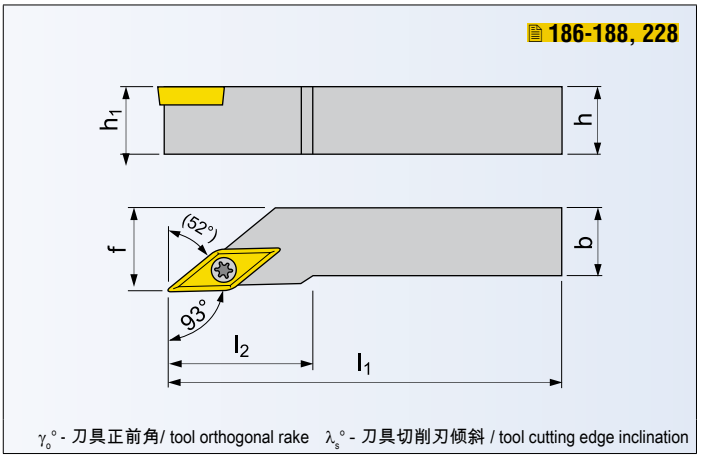

γ_o° - 刀具正前角/ tool orthogonal rake λ_s° - 刀具切削刃倾斜 / tool cutting edge inclination

刀具，用于外圆车削 / TOOL FOR EXTERNAL TURNING

ISO	R/L	尺寸 / Dimensions [mm]										kg	备件 Spare parts	刀片 Inserts
		h=h_1	b	f	l_1	l_{2max}				λ_s°	γ_o°			
SVJCR/L 1212 F 11	● / ●	12	12	16	80	20				0	0	0.10	SO1	VC.. 1103..
SVJCR/L 1616 H 11	● / ●	16	16	20	100	20				0	0	0.20	SO1	VC.. 1103..
SVJCR/L 2020 K 16-M-A	● / ●	20	20	25	125	28				0	0	0.40	SV10	VB.. 1604..; VC.. 1604..
SVJCR/L 2525 M 16-M-A	● / ●	25	25	32	150	32				0	0	0.68	SV10	VB.. 1604..; VC.. 1604..
SVJCR/L 3225 P 16-M-A	● / ●	32	25	32	170	32				0	0	1.10	SV10	VB.. 1604..; VC.. 1604..

备件 / SPARE PARTS

类型 Type	夹紧螺钉 Clamping screw	螺纹 Thread	刀垫 Shim	刀垫螺钉 Shim screw	螺丝刀 Screwdriver	扳手 Key
SO1	US 2506-T07P	(M2.5x6.3)	-	-	SDR T07P	-
SV10	US 3512-T15P	(M3.5x12.5)	SVN 160304	MS 3510	SDR T15P	HXK 3.5

● 标准库存产品 / Stock Assortiment ○ 非标准库存产品 / Non-stock Assortiment 所有尺寸 / All dimensions [mm]

PRAMET

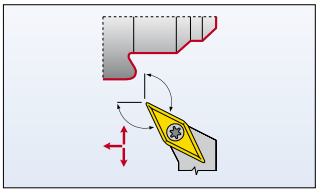

186-188, 228

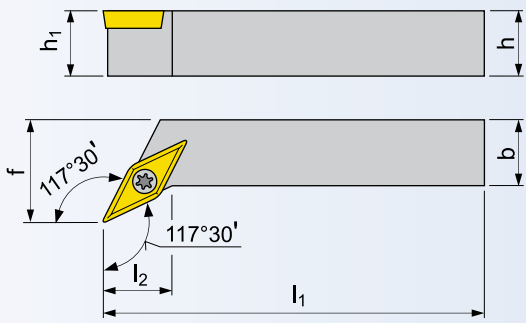

γ_o° - 刀具正前角/ tool orthogonal rake λ_s° - 刀具切削刃倾斜 / tool cutting edge inclination

刀具，用于外圆车削 / TOOL FOR EXTERNAL TURNING

ISO	R/L	尺寸 / Dimensions [mm]										kg	备件 Spare parts	刀片 Inserts
		$h=h_1$	b	f	l_1	l_{2max}				λ_s°	γ_o°			
SVPCR/L 1616 H 11	○ / ○	16	16	20	100	12				0	0	0.20	SO1	VC.. 1103..
SVPCR/L 2020 K 11	● / ●	20	20	25	125	12				0	0	0.40	SO1	VC.. 1103..
SVPCR/L 2020 K 16-M-A	● / ●	20	20	25	125	20				0	0	0.40	SV10	VB.. 1604..; VC.. 1604..
SVPCR/L 2525 M 16-M-A	● / ●	25	25	32	150	25				0	0	0.75	SV10	VB.. 1604..; VC.. 1604..
SVPCR/L 3225 P 16-M-A	● / ●	32	25	32	170	25				0	0	1.10	SV10	VB.. 1604..; VC.. 1604..

备件 / SPARE PARTS

类型 Type	夹紧螺钉 Clamping screw	螺纹 Thread	刀垫 Shim	刀垫螺钉 Shim screw	螺丝刀 Screwdriver	扳手 Key
SO1	US 2506-T07P	(M2.5x6.3)	-	-	SDR T07P	-
SV10	US 3512-T15P	(M3.5x12.5)	SVN 160304	MS 3510	SDR T15P	HXK 3.5

● 标准库存产品 / Stock Assortiment ○ 非标准库存产品 / Non-stock Assortiment 所有尺寸 / All dimensions [mm]

SVVCN

外圆车削 - ISO S
EXTERNAL TURNING - ISO S

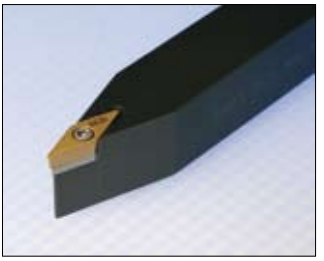

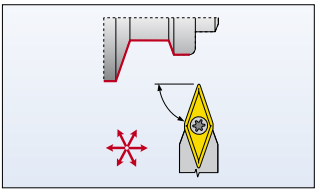

186-188, 228

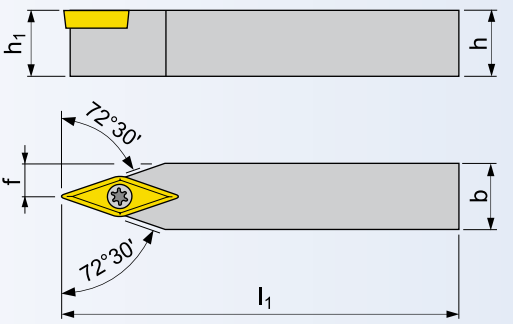

γ_o° - 刀具正前角/ tool orthogonal rake λ_s° - 刀具切削刃倾斜 / tool cutting edge inclination

刀具，用于外圆车削 / TOOL FOR EXTERNAL TURNING

ISO		尺寸 / Dimensions [mm]										kg	备件 Spare parts	刀片 Inserts
		h=h_1	b	f	l_1					λ_s°	γ_o°			
SVVCN 1212 F 11	●	12	12	6	80					0	0	0.08	SO1	VC.. 1103..
SVVCN 1616 H 11	●	16	16	8	100					0	0	0.18	SO1	VC.. 1103..
SVVCN 2020 K 11	●	20	20	10	125					0	0	0.35	SO1	VC.. 1103..
SVVCN 2020 K 16-M-A	●	20	20	10	125					0	0	0.35	SV10	VB.. 1604..; VC.. 1604..
SVVCN 2525 M 16-M-A	●	25	25	12.5	150					0	0	0.70	SV10	VB.. 1604..; VC.. 1604..
SVVCN 3225 P 16-M-A	●	32	25	12.5	170					0	0	1.00	SV10	VB.. 1604..; VC.. 1604..

备件 / SPARE PARTS

类型 Type	夹紧螺钉 Clamping screw	螺纹 Thread	刀垫 Shim	刀垫螺钉 Shim screw	螺丝刀 Screwdriver	扳手 Key
SO1	US 2506-T07P	(M2.5x6.3)	-	-	SDR T07P	-
SV10	US 3512-T15P	(M3.5x12.5)	SVN 160304	MS 3510	SDR T15P	HXK 3.5

● 标准库存产品 / Stock Assortment ○ 非标准库存产品 / Non-stock Assortment 所有尺寸 / All dimensions [mm]

PRAMET

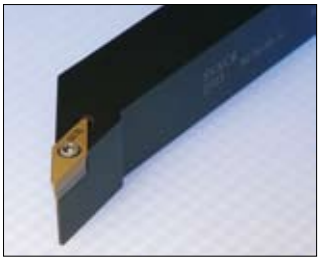

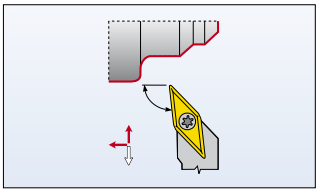

186-188, 228

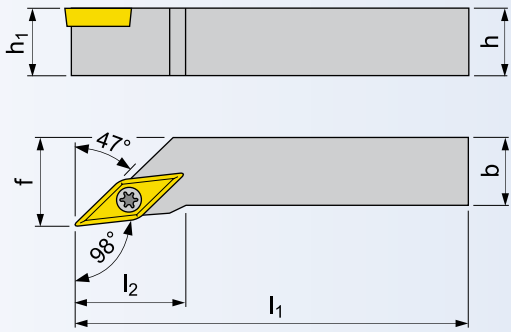

γ_o° - 刀具正前角/ tool orthogonal rake λ_s° - 刀具切削刃倾斜 / tool cutting edge inclination

刀具，用于外圆车削 / TOOL FOR EXTERNAL TURNING

ISO	R/L	尺寸 / Dimensions [mm]										kg	备件 Spare parts	刀片 Inserts
		$h=h_1$	b	f	l_1	l_{2max}				λ_s°	γ_o°			
SVXCR/L 1212 F 11	○ / ○	12	12	16	80	20				0	0	0.10	SO1	VC.. 1103..
SVXCR/L 1616 H 11	● / ●	16	16	20	100	20				0	0	0.20	SO1	VC.. 1103..
SVXCR/L 2020 K 16-M-A	● / ●	20	20	25	125	28				0	0	0.75	SV10	VB.. 1604..; VC.. 1604..
SVXCR/L 2525 M 16-M-A	● / ●	25	25	32	150	32				0	0	0.68	SV10	VB.. 1604..; VC.. 1604..
SVXCR/L 3225 P 16-M-A	● / ○	32	25	32	170	32				0	0	1.10	SV10	VB.. 1604..; VC.. 1604..

备件 / SPARE PARTS

类型 Type	夹紧螺钉 Clamping screw	螺纹 Thread	刀垫 Shim	刀垫螺钉 Shim screw	螺丝刀 Screwdriver	扳手 Key
SO1	US 2506-T07P	(M2.5x6.3)	-	-	SDR T07P	-
SV10	US 3512-T15P	(M3.5x12.5)	SVN 160304	MS 3510	SDR T15P	HXK 3.5

● 标准库存产品 / Stock Assortiment ○ 非标准库存产品 / Non-stock Assortiment 所有尺寸 / All dimensions [mm]

SWLCR/L

外圆车削 - ISO S
EXTERNAL TURNING - ISO S

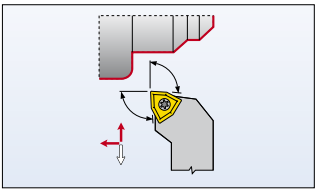

190-191

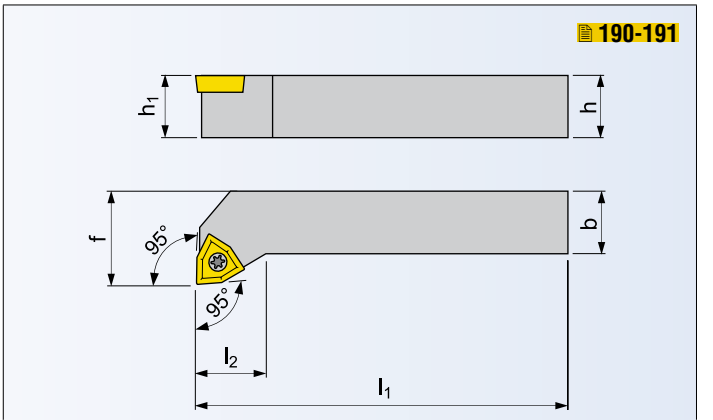

γ_o° - 刀具正前角/ tool orthogonal rake λ_s° - 刀具切削刃倾斜 / tool cutting edge inclination

刀具，用于外圆车削 / TOOL FOR EXTERNAL TURNING

ISO	R/L	尺寸 / Dimensions [mm]										kg	备件 Spare parts	刀片 Inserts
		$h=h_1$	b	f	l_1	l_{2max}				λ_s°	γ_o°			
SWLCR/L 1616 H 06	● / ●	16	16	20	100	15				0	0	0.20	SO8	WC.. 06T3..
SWLCR/L 2020 K 06	● / ●	20	20	25	125	15				0	0	0.40	SO8	WC.. 06T3..
SWLCR/L 2525 M 08	● / ●	25	25	32	150	20				0	0	0.75	SO9	WC.. 0804..

备件 / SPARE PARTS

类型 Type	夹紧螺钉 Clamping screw	螺纹 Thread	刀垫 Shim	刀垫螺钉 Shim screw	螺丝刀 Screwdriver	扳手 Key
SO8	US 3510-T15P	(M3.5x10.4)	-	-	SDR T15P	-
SO9	US 4512-T15P	(M4.5x12.0)	-	-	SDR T15P	-

● 标准库存产品 / Stock Assortiment ○ 非标准库存产品 / Non-stock Assortiment 所有尺寸 / All dimensions [mm]

PRAMET

SCFCR/L

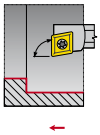

102

SCKCR/L

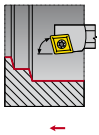

103

SCLCR/L

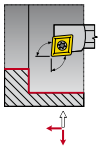

104

SCXCR/L

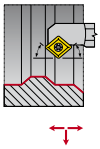

105

SDQCR/L

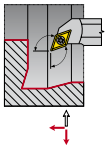

106

SDUCR/L

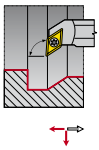

107

SDZCR/L

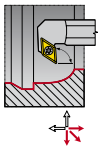

108

SSSCR/L

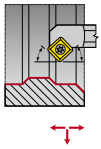

109

STFCR/L

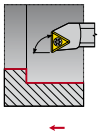

110

SVQCR/L

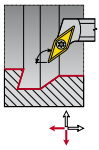

111

SVUCR/L

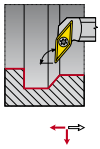

112

SWLCR/L

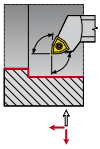

113

SCFCR/L

内孔车削 - ISO S
INTERNAL TURNING - ISO S

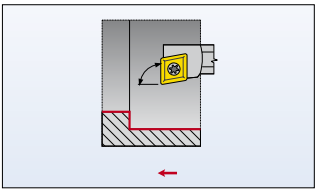

149-151

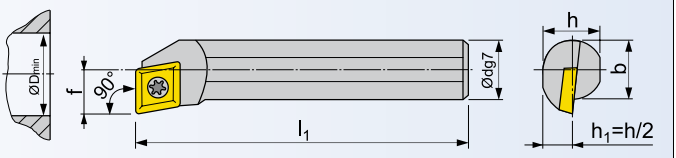

γ_o° - 刀具正前角/ tool orthogonal rake λ_s° - 刀具切削刃倾斜 / tool cutting edge inclination

刀具，用于内孔车削 / TOOL FOR INTERNAL TURNING

ISO	R/L	尺寸 / Dimensions [mm]										kg	备件 Spare parts	刀片 Inserts
		Ødg7	f	l_1	h	b	$ØD_{min}$			λ_s°	γ_o°			
S10H-SCFCR/L 06	● / ●	10	7	100	9	9.5	13			-10	0	0.06	SO2	CC.. 0602..
S12K-SCFCR/L 06	● / ●	12	9	125	11	11.5	16			-7	0	0.11	SO2	CC.. 0602..

备件 / SPARE PARTS

类型 Type	夹紧螺钉 Clamping screw	螺纹 Thread	刀垫 Shim	刀垫螺钉 Shim screw	螺丝刀 Screwdriver	扳手 Key
SO2	US 2505-T07P	(M2.5x5.2)	-	-	SDR T07P	-

● 标准库存产品 / Stock Assortment ○ 非标准库存产品 / Non-stock Assortment 所有尺寸 / All dimensions [mm]

PRAMET

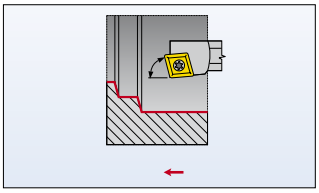

149-151

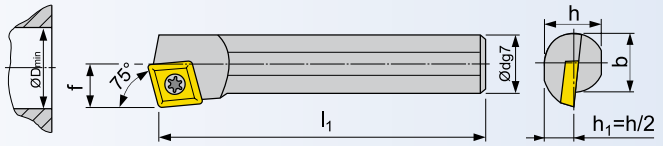

γ_o° - 刀具正前角/ tool orthogonal rake λ_s° - 刀具切削刃倾斜 / tool cutting edge inclination

刀具，用于内孔车削 / TOOL FOR INTERNAL TURNING

ISO	R/L	尺寸 / Dimensions [mm]										kg	备件 Spare parts	刀片 Inserts
		$Ø_{dg7}$	f	l_1	h	b	$ØD_{min}$			λ_s°	γ_o°			
S08F-SCKCR/L 06	○ / ○	8	6	80	7.2	7.6	11			-12	0	0.03	SO2	CC.. 0602..
S10H-SCKCR/L 06	○ / ○	10	7	100	9	9.5	13			-10	0	0.06	SO2	CC.. 0602..
S12K-SCKCR/L 06	● / ○	12	9	125	11	11.5	16			-8	0	0.11	SO2	CC.. 0602..
S16M-SCKCR/L 09-A	● / ○	16	11	150	14.5	15	20			-8	0	0.24	SO5	CC.. 09T3..
S20S-SCKCR/L 09	● / ○	20	13	250	18.5	18.5	25			-5	0	0.60	SO8	CC.. 09T3..
S25T-SCKCR/L 09	○ / ○	25	17	300	23	23	32			-3	0	1.15	SO8	CC.. 09T3..
S32U-SCKCR/L 12-A	● / ○	32	22	350	30	30	40			-10	0	2.10	SC20	CC.. 1204..

备件 / SPARE PARTS

类型 Type	夹紧螺钉 Clamping screw	螺纹 Thread	刀垫 Shim	刀垫螺钉 Shim screw	螺丝刀 Screwdriver	扳手 Key
SO2	US 2505-T07P	(M2.5x5.2)	-	-	SDR T07P	-
SO8	US 3510-T15P	(M3.5x10.4)	-	-	SDR T15P	-
SO5	US 4008-T15P	(M4x7.8)	-	-	SDR T15P	-
SC20	US 5012-T15P	(M5x12.0)	SCN 120304	MS 5008	SDR T15P	HXK 5

● 标准库存产品 / Stock Assortiment ○ 非标准库存产品 / Non-stock Assortiment 所有尺寸 / All dimensions [mm]

SCLCR/L

内孔车削 - ISO S
INTERNAL TURNING - ISO S

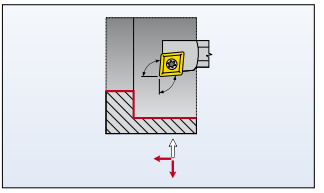

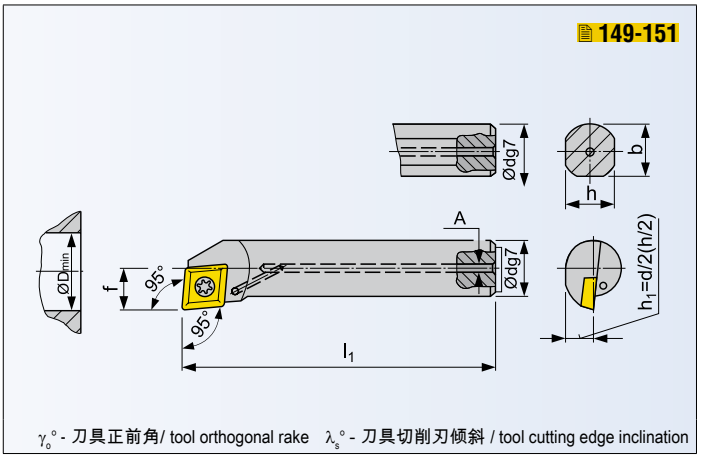

刀具，用于内孔车削 / TOOL FOR INTERNAL TURNING

ISO	R/L	尺寸 / Dimensions [mm]										kg	备件 Spare parts	刀片 Inserts
		Ødg7	f	l_1	h	b	A	$ØD_{min}$		$\lambda_s°$	$\gamma_o°$			
S08F-SCLCR/L 06	●/●	8	6	80	7.2	7.6	-	11		-13	0	0.03	SO2	CC.. 0602..
S10H-SCLCR/L 06	○/○	10	7	100	9	9.5	-	13		-10	0	0.06	SO2	CC.. 0602..
A10H-SCLCR/L 06	●/●	10	7	100	9	-	Ø4	13		-10	0	0.05	SO2	CC.. 0602..
A12K-SCLCR/L 06	●/●	12	9	125	11	-	Ø5	16		-8	0	0.10	SO1	CC.. 0602..
S12K-SCLCR/L 06	○/○	12	9	125	11	11.5	-	16		-8	0	0.11	SO1	CC.. 0602..
S16M-SCLCR/L 06	●/●	16	11	150	14.5	15	-	20		-8	0	0.24	SO1	CC.. 0602..
S16M-SCLCR/L 09-A	○/○	16	11	150	14.5	15	-	20		-8	0	0.24	SO5	CC.. 09T3..
A16M-SCLCR/L 09-A	●/●	16	11	150	14.5	-	Ø6	20		-8	0	0.22	SO5	CC.. 09T3..
A20Q-SCLCR/L 09	●/●	20	13	180	18	-	Ø8	25		-5	0	0.40	SO8	CC.. 09T3..
S20S-SCLCR/L 09	●/●	20	13	250	18	18.5	-	25		-5	0	0.60	SO8	CC.. 09T3..
A25R-SCLCR/L 09	●/●	25	17	200	23	23	Ø8	32		-3	0	0.65	SO8	CC.. 09T3..
S25T-SCLCR/L 09	●/●	25	17	300	23	23	-	32		-3	0	1.15	SO8	CC.. 09T3..
A32S-SCLCR/L 12-A	●/●	32	22	250	30	30	Ø8	40		-10	0	1.35	SC20	CC.. 1204..
S32U-SCLCR/L 12-A	●/●	32	22	350	30	30	-	40		-10	0	2.10	SC20	CC.. 1204..

备件 / SPARE PARTS

类型 Type	夹紧螺钉 Clamping screw	螺纹 Thread	刀垫 Shim	刀垫螺钉 Shim screw	螺丝刀 Screwdriver	扳手 Key
SO1	US 2506-T07P	(M2.5x6.3)	-	-	SDR T07P	-
SO2	US 2505-T07P	(M2.5x5.2)	-	-	SDR T07P	-
SO8	US 3510-T15P	(M3.5x10.4)	-	-	SDR T15P	-
SO5	US 4008-T15P	(M4x7.8)	-	-	SDR T15P	-
SC20	US 5012-T15P	(M5x12.0)	SCN 120304	MS 5008	SDR T15P	HXK 5

● 标准库存产品 / Stock Assortiment ○ 非标准库存产品 / Non-stock Assortiment 所有尺寸 / All dimensions [mm]

PRAMET

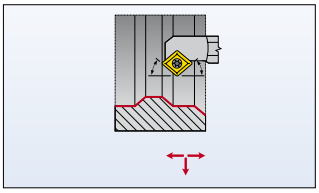

149-151

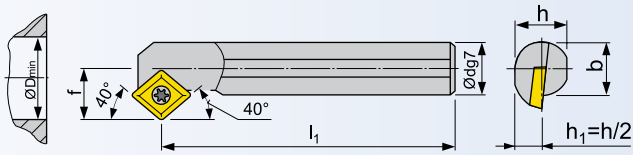

γ_o° - 刀具正前角/ tool orthogonal rake λ_s° - 刀具切削刃倾斜 / tool cutting edge inclination

刀具，用于内孔车削 / TOOL FOR INTERNAL TURNING

ISO	R/L	尺寸 / Dimensions [mm]										kg	备件 Spare parts	刀片 Inserts
		Ødg7	f	l_1	h	b	$ØD_{min}$			λ_s°	γ_o°			
S10H-SCXCR/L 06	● / ○	10	7	100	9	9.5	13			-10	0	0.06	SO2	CC.. 0602..
S12K-SCXCR/L 06	● / ○	12	9	125	11	11.5	16			-8	0	0.11	SO2	CC.. 0602..
S16Q-SCXCR/L 06	● / ○	16	11	150	14.5	15	20			-7	0	0.24	SO1	CC.. 0602..

备件 / SPARE PARTS

类型 Type	夹紧螺钉 Clamping screw	螺纹 Thread	刀垫 Shim	刀垫螺钉 Shim screw	螺丝刀 Screwdriver	扳手 Key
SO1	US 2506-T07P	(M2.5x6.3)	-	-	SDR T07P	-
SO2	US 2505-T07P	(M2.5x5.2)	-	-	SDR T07P	-

● 标准库存产品 / Stock Assortment ○ 非标准库存产品 / Non-stock Assortment 所有尺寸 / All dimensions [mm]

SDQCR/L

内孔车削 - ISO S
INTERNAL TURNING - ISO S

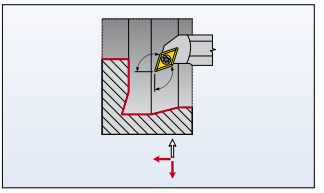

156-158, 227

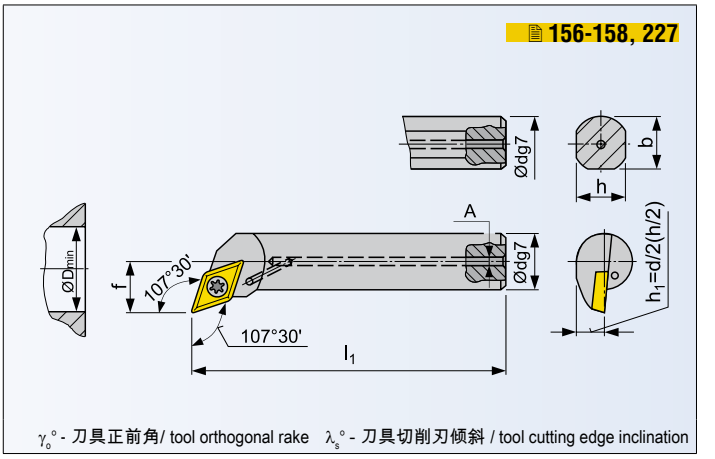

γ_o° - 刀具正前角/ tool orthogonal rake λ_s° - 刀具切削刃倾斜 / tool cutting edge inclination

刀具，用于内孔车削 / TOOL FOR INTERNAL TURNING

ISO	R/L	尺寸 / Dimensions [mm]										kg	备件 Spare parts	刀片 Inserts
		Ødg7	f	l_1	h	b	A	$ØD_{min}$		λ_s°	γ_o°			
A10H-SDQCR/L 07	●/●	10	7	100	9	-	Ø4	13		-10	0	0.05	SO2	DC.. 0702..
A12K-SDQCR/L 07	●/●	12	9	125	11	-	Ø5	16		-7	0	0.10	SO2	DC.. 0702..
A16M-SDQCR/L 07	●/●	16	11	150	14.5	-	Ø6	20		-7	0	0.22	SO1	DC.. 0702..
S20S-SDQCR/L 11	●/●	20	13	250	18	18.5	-	25		-5	0	0.60	SO8	DC.. 11T3..
A20Q-SDQCR/L 11	●/●	20	13	180	18	-	Ø8	25		-5	0	0.40	SO8	DC.. 11T3..
S25T-SDQCR/L 11	●/●	25	17	300	23	23	-	32		-3	0	1.15	SO8	DC.. 11T3..
A25R-SDQCR/L 11	●/●	25	17	200	23	23	Ø8	32		-3	0	0.65	SO8	DC.. 11T3..
S32U-SDQCR/L 11-A	●/●	32	22	350	30	30	-	40		-10	0	2.10	SD10	DC.. 11T3..
A32S-SDQCR/L 11-A	●/●	32	22	250	30	30	Ø8	40		-10	0	1.35	SD10	DC.. 11T3..

备件 / SPARE PARTS

类型 Type	夹紧螺钉 Clamping screw	螺纹 Thread	刀垫 Shim	刀垫螺钉 Shim screw	螺丝刀 Screwdriver	扳手 Key
SO1	US 2506-T07P	(M2.5x6.3)	-	-	SDR T07P	-
SO2	US 2505-T07P	(M2.5x5.2)	-	-	SDR T07P	-
SO8	US 3510-T15P	(M3.5x10.4)	-	-	SDR T15P	-
SD10	US 3510-T15P	(M3.5x10.4)	SDN 110304	MS 3510	SDR T15P	HXK 3.5

● 标准库存产品 / Stock Assortiment ○ 非标准库存产品 / Non-stock Assortiment 所有尺寸 / All dimensions [mm]

PRAMET

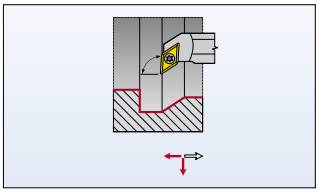

156-158, 227

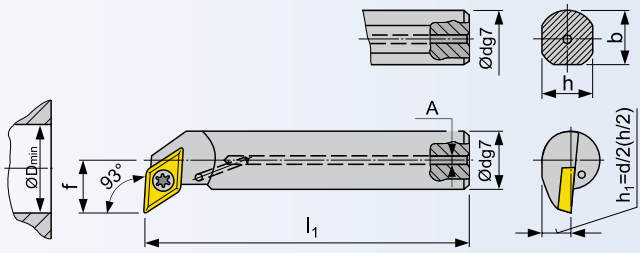

γ_o° - 刀具正前角/ tool orthogonal rake λ_s° - 刀具切削刃倾斜 / tool cutting edge inclination

刀具，用于内孔车削 / TOOL FOR INTERNAL TURNING

ISO	R/L	尺寸 / Dimensions [mm]										kg	备件 Spare parts	刀片 Inserts
		Ødg7	f	l_1	h	b	A	$ØD_{min}$		λ_s°	γ_o°			
A10H-SDUCR/L 07	● / ●	10	7	100	9	-	Ø4	13		-10	0	0.05	SO2	DC.. 0702..
A12K-SDUCR/L 07	● / ●	12	9	125	11	-	Ø5	16		-7	0	0.10	SO2	DC.. 0702..
A16M-SDUCR/L 07	● / ●	16	11	150	14.5	-	Ø6	20		-7	0	0.22	SO1	DC.. 0702..
S20S-SDUCR/L 11	● / ●	20	13	250	18	18.5	-	25		-5	0	0.60	SO8	DC.. 11T3..
A20Q-SDUCR/L 11	● / ●	20	13	180	18	-	Ø8	25		-5	0	0.40	SO8	DC.. 11T3..
S25T-SDUCR/L 11	● / ●	25	17	300	23	23	-	32		-3	0	1.15	SO8	DC.. 11T3..
A25R-SDUCR/L 11	● / ●	25	17	200	23	23	Ø8	32		-3	0	0.65	SO8	DC.. 11T3..
S32U-SDUCR/L 11-A	● / ●	32	22	350	30	30	-	40		-10	0	2.10	SD10	DC.. 11T3..
A32S-SDUCR/L 11-A	● / ●	32	22	250	30	30	Ø8	40		-10	0	1.35	SD10	DC.. 11T3..

备件 / SPARE PARTS

类型 Type	夹紧螺钉 Clamping screw	螺纹 Thread	刀垫 Shim	刀垫螺钉 Shim screw	螺丝刀 Screwdriver	扳手 Key
SO1	US 2506-T07P	(M2.5x6.3)	-	-	SDR T07P	-
SO2	US 2505-T07P	(M2.5x5.2)	-	-	SDR T07P	-
SO8	US 3510-T15P	(M3.5x10.4)	-	-	SDR T15P	-
SD10	US 3510-T15P	(M3.5x10.4)	SDN 110304	MS 3510	SDR T15P	HXK 3.5

● 标准库存产品 / Stock Assortment ○ 非标准库存产品 / Non-stock Assortment 所有尺寸 / All dimensions [mm]

SDZCR/L

内孔车削 - ISO S
INTERNAL TURNING - ISO S

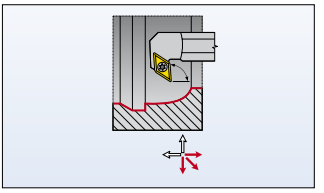

156-158, 227

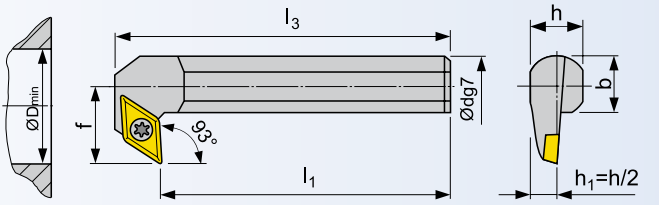

γ_o° - 刀具正前角/ tool orthogonal rake λ_s° - 刀具切削刃倾斜 / tool cutting edge inclination

刀具，用于内孔车削 / TOOL FOR INTERNAL TURNING

ISO	R/L	尺寸 / Dimensions [mm]										kg	备件 Spare parts	刀片 Inserts
		Ødg7	f	l_1	l_3	h	b	$ØD_{min}$		λ_s°	γ_o°			
S16M-SDZCR/L 07-93	● / ●	16	17	150	163	14.5	15	27		-4	0	0.26	SO1	DC.. 0702..
S20Q-SDZCR/L 11-93	● / ●	20	22	180	198	18	18.5	35		-5	0	0.48	SO8	DC.. 11T3..
S25R-SDZCR/L 11-93	● / ●	25	27	200	218	23	23	42		-3	0	0.80	SO8	DC.. 11T3..
S32S-SDZCR/L 11-93-A	● / ●	32	35	250	268	30	30	53		-6	0	1.60	SD10	DC.. 11T3..
S40T-SDZCR/L 11-93-A	● / ●	40	43	300	322	38	38	65		-5	0	3.00	SD10	DC.. 11T3..

备件 / SPARE PARTS

类型 Type	夹紧螺钉 Clamping screw	螺纹 Thread	刀垫 Shim	刀垫螺钉 Shim screw	螺丝刀 Screwdriver	扳手 Key
SO1	US 2506-T07P	(M2.5x6.3)	-	-	SDR T07P	-
SO8	US 3510-T15P	(M3.5x10.4)	-	-	SDR T15P	-
SD10	US 3510-T15P	(M3.5x10.4)	SDN 110304	MS 3510	SDR T15P	HXK 3.5

● 标准库存产品 / Stock Assortiment ○ 非标准库存产品 / Non-stock Assortiment 所有尺寸 / All dimensions [mm]

PRAMET

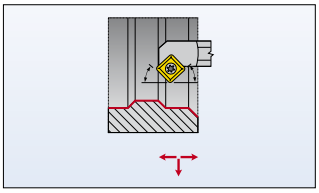

171-173

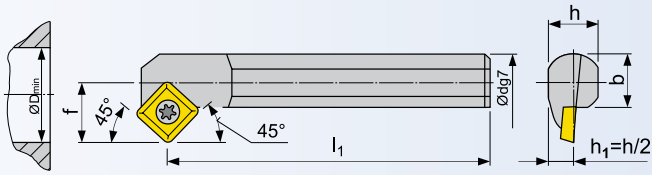

γ_o° - 刀具正前角/ tool orthogonal rake λ_s° - 刀具切削刃倾斜 / tool cutting edge inclination

刀具，用于内孔车削 / TOOL FOR INTERNAL TURNING

ISO	R/L	尺寸 / Dimensions [mm]										kg	备件 Spare parts	刀片 Inserts
		Ødg7	f	l_1	h	b	$ØD_{min}$			λ_s°	γ_o°			
S20S-SSSCR/L 09	● / ●	20	13	250	18	18.5	25			-5	0	0.60	SO8	SC.. 09T3..
S25T-SSSCR/L 09	● / ●	25	17	300	23	23	32			-3	0	1.15	SO8	SC.. 09T3..

备件 / SPARE PARTS

类型 Type	夹紧螺钉 Clamping screw	螺纹 Thread	刀垫 Shim	刀垫螺钉 Shim screw	螺丝刀 Screwdriver	扳手 Key
SO8	US 3510-T15P	(M3.5x10.4)	-	-	SDR T15P	-

● 标准库存产品 / Stock Assortment ○ 非标准库存产品 / Non-stock Assortment 所有尺寸 / All dimensions [mm]

STFCR/L

内孔车削 - ISO S
INTERNAL TURNING - ISO S

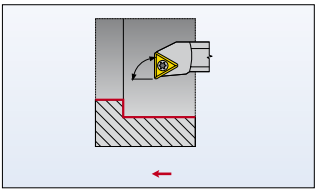

179-181

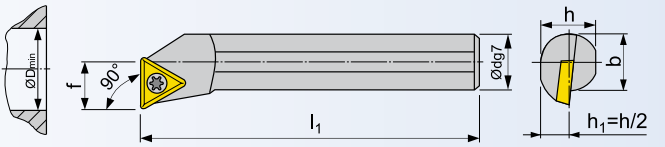

γ_o° - 刀具正前角/ tool orthogonal rake λ_s° - 刀具切削刃倾斜 / tool cutting edge inclination

刀具，用于内孔车削 / TOOL FOR INTERNAL TURNING

ISO	R/L	尺寸 / Dimensions [mm]										kg	备件 Spare parts	刀片 Inserts
		Ødg7	f	l_1	h	b	$ØD_{min}$			λ_s°	γ_o°			
S10H-STFCR/L 11	● / ●	10	7	100	9	9.5	13			-10	0	0.06	SO2	TC.. 1102..
S12K-STFCR/L 11	● / ●	12	9	125	11	11.5	16			-7	0	0.11	SO1	TC.. 1102..
S16M-STFCR/L 11	● / ●	16	11	150	14.5	15	20			-7	0	0.25	SO1	TC.. 1102..
S20Q-STFCR/L 11	● / ●	20	13	180	18	18.5	25			-7	0	0.45	SO1	TC.. 1102..
S25T-STFCR/L 16	● / ●	25	17	300	23	23	32			-3	0	1.15	SO8	TC.. 16T3..
S32U-STFCR/L 16-A	● / ○	32	22	350	30	30	40			-10	0	2.10	ST10	TC.. 16T3..

备件 / SPARE PARTS

类型 Type	夹紧螺钉 Clamping screw	螺纹 Thread	刀垫 Shim	刀垫螺钉 Shim screw	螺丝刀 Screwdriver	扳手 Key
SO1	US 2506-T07P	(M2.5x6.3)	-	-	SDR T07P	-
SO2	US 2505-T07P	(M2.5x5.2)	-	-	SDR T07P	-
SO8	US 3510-T15P	(M3.5x10.4)	-	-	SDR T15P	-
ST10	US 3510-T15P	(M3.5x10.4)	STN 160308	MS 3510	SDR T15P	HXK 3.5

● 标准库存产品 / Stock Assortiment ○ 非标准库存产品 / Non-stock Assortiment 所有尺寸 / All dimensions [mm]

PRAMET

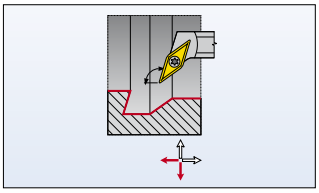

186-188, 228

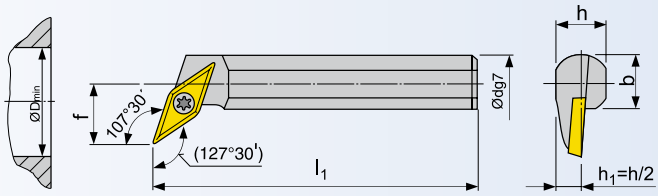

γ_o° - 刀具正前角/ tool orthogonal rake λ_s° - 刀具切削刃倾斜 / tool cutting edge inclination

刀具，用于内孔车削 / TOOL FOR INTERNAL TURNING

ISO	R/L	尺寸 / Dimensions [mm]										kg	备件 Spare parts	刀片 Inserts
		Ødg7	f	l_1	h	b	$ØD_{min}$			λ_s°	γ_o°			
S16R-SVQCR/L 11	● / ●	16	11	200	14.5	115	20			-5	0	0.45	SO1	VC.. 1103..
S20S-SVQCR/L 11	● / ○	20	13	250	18	18.5	25			-4	0	0.60	SO1	VC.. 1103..
S25T-SVQCR/L 16	● / ●	25	17	300	23	23	32			-7	0	1.15	SO8	VB.. 1604..; VC.. 1604..
S32U-SVQCR/L 16	● / ○	32	22	350	30	30	40			-5	0	2.10	SO8	VB.. 1604..; VC.. 1604..
S40V-SVQCR/L 16-A	● / ○	40	27	400	38	38	50			-5	0	4.10	SV10	VB.. 1604..; VC.. 1604..

备件 / SPARE PARTS

类型 Type	夹紧螺钉 Clamping screw	螺纹 Thread	刀垫 Shim	刀垫螺钉 Shim screw	螺丝刀 Screwdriver	扳手 Key
SO1	US 2506-T07P	(M2.5x6.3)	-	-	SDR T07P	-
SO8	US 3510-T15P	(M3.5x10.4)	-	-	SDR T15P	-
SV10	US 3512-T15P	(M3.5x12.5)	SVN 160304	MS 3510	SDR T15P	HXK 3.5

● 标准库存产品 / Stock Assortiment ○ 非标准库存产品 / Non-stock Assortiment 所有尺寸 / All dimensions [mm]

SVUCR/L

内孔车削 - ISO S
INTERNAL TURNING - ISO S

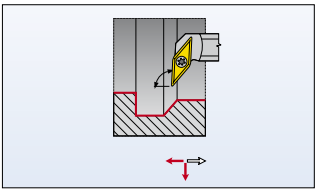

186-188, 228

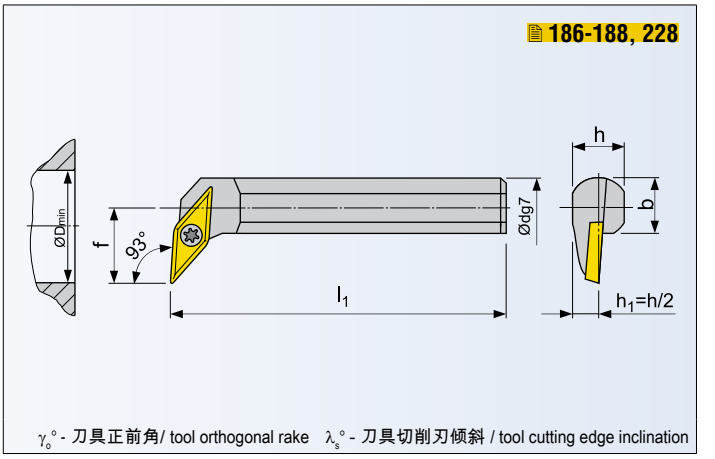

γ_o° - 刀具正前角/ tool orthogonal rake λ_s° - 刀具切削刃倾斜 / tool cutting edge inclination

刀具，用于内孔车削 / TOOL FOR INTERNAL TURNING

ISO	R/L	尺寸 / Dimensions [mm]										kg	备件 Spare parts	刀片 Inserts
		Ødg7	f	l_1	h	b	$ØD_{min}$			λ_s°	γ_o°			
S20S-SVUCR/L 11	● / ●	20	13	250	18	18.5	25			-4	0	0.60	SO1	VC.. 1103..
S25T-SVUCR/L 16	● / ●	25	17	300	23	23	32			-7	0	1.15	SO8	VB.. 1604..; VC.. 1604..
S32U-SVUCR/L 16	● / ●	32	22	350	30	30	40			-5	0	2.10	SO8	VB.. 1604..; VC.. 1604..
S40V-SVUCR/L 16-A	● / ●	40	27	400	38	38	50			-5	0	4.10	SV10	VB.. 1604..; VC.. 1604..

备件 / SPARE PARTS

类型 Type	夹紧螺钉 Clamping screw	螺纹 Thread	刀垫 Shim	刀垫螺钉 Shim screw	螺丝刀 Screwdriver	扳手 Key
SO1	US 2506-T07P	(M2.5x6.3)	-	-	SDR T07P	-
SO8	US 3510-T15P	(M3.5x10.4)	-	-	SDR T15P	-
SV10	US 3512-T15P	(M3.5x12.5)	SVN 160304	MS 3510	SDR T15P	HXK 3.5

● 标准库存产品 / Stock Assortiment ○ 非标准库存产品 / Non-stock Assortiment 所有尺寸 / All dimensions [mm]

PRAMET

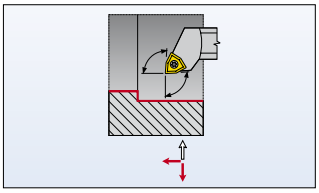

190-191

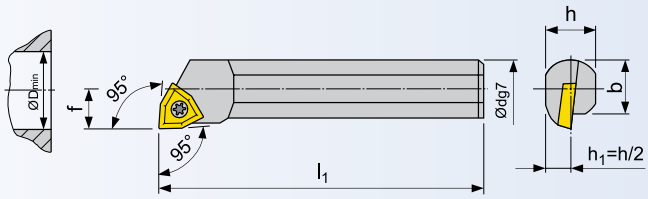

γ_o° - 刀具正前角/ tool orthogonal rake λ_s° - 刀具切削刃倾斜 / tool cutting edge inclination

刀具，用于内孔车削 / TOOL FOR INTERNAL TURNING

ISO	R/L	尺寸 / Dimensions [mm]										kg	备件 Spare parts	刀片 Inserts
		Ødg7	f	l_1	h	b	$ØD_{min}$			λ_s°	γ_o°			
S20S-SWLCR/L 06	● / ●	20	13	250	18	18.5	25			-7	0	0.60	SO8	WC.. 06T3..
S25T-SWLCR/L 06	● / ●	25	17	300	23	23	32			-7	0	1.15	SO8	WC.. 06T3..
S32U-SWLCR/L 08	● / ○	32	22	350	30	30	40			-5	0	4.10	SO9	WC.. 0804..

备件 / SPARE PARTS

类型 Type	夹紧螺钉 Clamping screw	螺纹 Thread	刀垫 Shim	刀垫螺钉 Shim screw	螺丝刀 Screwdriver	扳手 Key
SO8	US 3510-T15P	(M3.5x10.4)	-	-	SDR T15P	-
SO9	US 4512-T15P	(M4.5x12.0)	-	-	SDR T15P	-

● 标准库存产品 / Stock Assortiment ○ 非标准库存产品 / Non-stock Assortiment 所有尺寸 / All dimensions [mm]

SCLCR/L

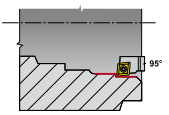

115-116

SRSCR/L

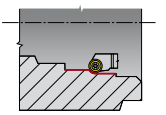

115-116

SSKCR/L

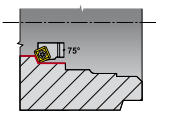

115-116

SSRCR/L

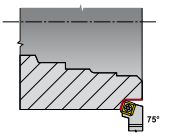

115-116

SSSCR/L

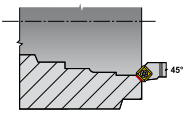

115-116

STFCR/L

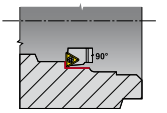

115-116

STGCR/L

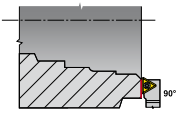

115-116

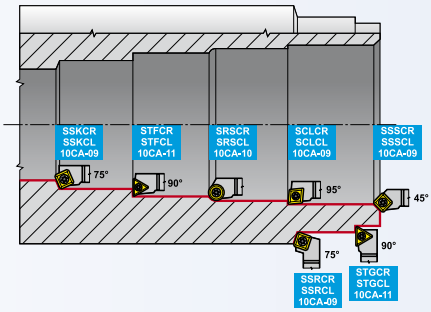

γ_o° - tool orthogonal rake / Âng. saída ortogonal λ_s° - tool cutting edge inclination / Âng. de inclinação

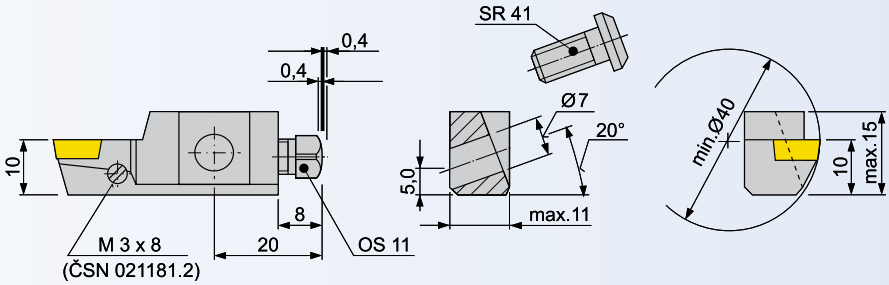

刀卡 / CARTRIDGES

ISO	R/L	kg	备件 Spare parts	刀片 Inserts		
SCLCR/L 10 CA-09	● / ○	0.06	SO4	CC.. 09T3..		149 - 151
SRSCR/L 10 CA-10	○ / ○	0.06	SO4	RC.. 10T3MO		166 - 167
SSKCR/L 10 CA-09	● / ○	0.06	SO4	SC.. 09T3..		172 - 173
SSSCR/L 10 CA-09	○ / ○	0.06	SO4	SC.. 09T3..		172 - 173
SSRCR/L 10 CA-09	○ / ○	0.06	SO4	SC.. 09T3..		172 - 173
STFCR/L 10 CA-11	● / ○	0.06	SO1	TC.. 1102..		179 - 181
STGCR/L 10 CA-11	○ / ○	0.06	SO1	TC.. 1102..		179 - 181

备件 / SPARE PARTS

类型 Type	夹紧螺钉 Clamping screw	螺纹 Thread	刀垫 Shim	刀垫螺钉 Shim screw	螺丝刀 Screwdriver	扳手 Key
SO1	US 2506-T07P	(M2.5x6.3)	-	-	SDR T07P	-
SO4	US 3508-T15P	(M3.5x8.5)	-	-	SDR T15P	-

● 标准库存产品 / Stock Assortiment ○ 非标准库存产品 / Non-stock Assortiment 所有尺寸 / All dimensions [mm]

SCLCR/L 10 CA-09

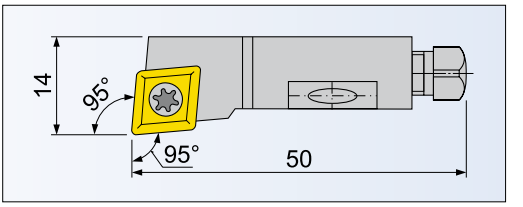

SRSCR/L 10 CA-10

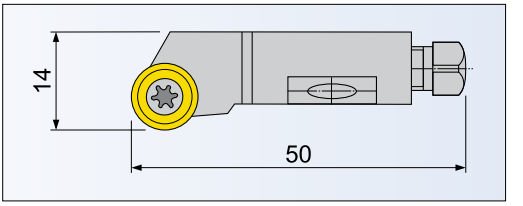

SSKCR/L 10 CA-09

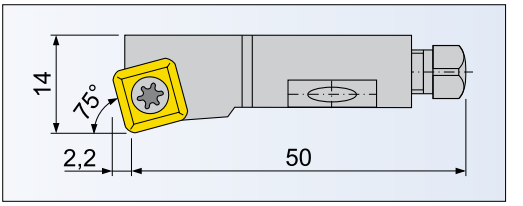

SSRCR/L 10 CA-09

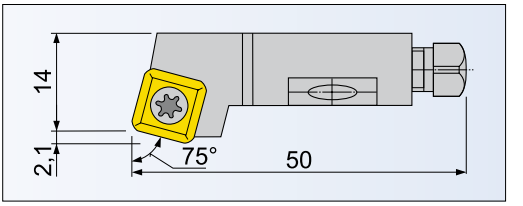

SSSCR/L 10 CA-09

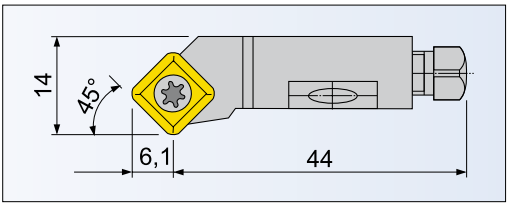

STFCR/L 10 CA-11

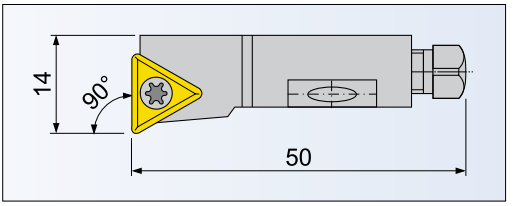

STGCR/L 10 CA-11

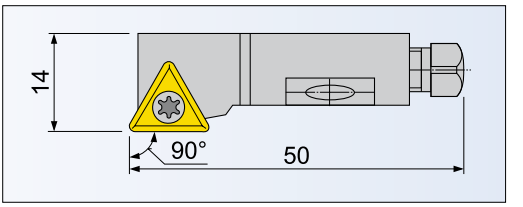

A32T.GGHR-0413
GGR 2525 M03 R03 9024
LGM 0 13
HS 6520C
GFL 2525 M03 R03 0017
LGM 0 11

ISO 代码名称 - 切断、切槽 - 外圆刀具
ISO CODE DESIGNATION - PARTING.GROOVING - EXTERNAL TOOLS

1	2	3	4	5	6	7	8	9	10	11
G	F	I	L	25	25	M	03	R	030	017

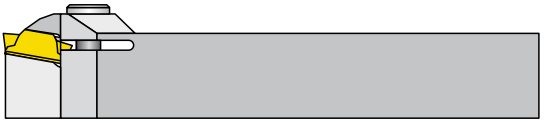

1
夹紧名称
Clamping designation

G

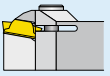

2
刀柄主偏角
Toolholders setting angle

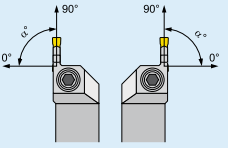

α	
G = 0°	K = 75°
R = 15°	F = 90°
T = 30°	B = 105°
S = 45°	E = 120°
W = 60°	D = 135°

3
最大切槽 (车削)
Maximal grooving (turning)

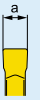

G = 2.0 × a	N = 5.5 × a
H = 2.5 × a	O = 6.0 × a
I = 3.0 × a	P = 6.5 × a
J = 3.5 × a	Q = 7.0 × a
K = 4.0 × a	R = 7.5 × a
L = 4.5 × a	S = 8.0 × a
M = 5.0 × a	T = 8.5 × a

4
刀柄类别 (右/左)
Version (right/left)

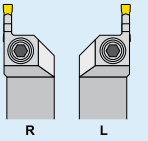

5
刀柄高度 [mm]
Shank height [mm]

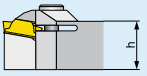

12 = 12 mm
16 = 16 mm
20 = 20 mm
atd.

6
刀柄宽度 [mm]
Shank width [mm]

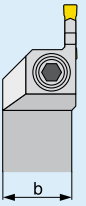

12 = 12 mm
16 = 16 mm
20 = 20 mm
atd.

7
长度
Lenght

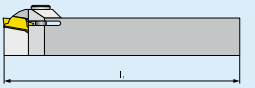

H = 100 mm
K = 125 mm
M = 150 mm
P = 170 mm
R = 200 mm

8
刀片宽度
Insert width

	a [mm]
02	2.0
03	3.0
04	4.0
05	5.0
06	6.0

9
刀片曲率方向
Blade curvature direction

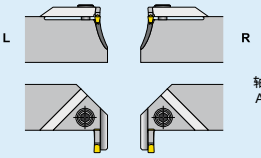

轴向车削的附加信息。
Additional information
for axial turning.

10
最大直径
Maximum diameter

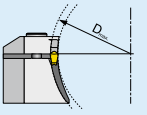

轴向车削的附加信息。
Additional information
for axial turning.

11
最小直径
Minimum diameter

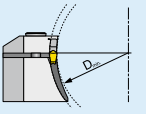

轴向车削的附加信息。
Additional information
for axial turning.

PRAMET

1	2	3		4	5	6	7	8
A	16	Q	-	G	G	E	L	0313

1
刀具类型
Type of tool

A

鋼冷卻液孔
Steel with coolant hole

2
刀柄直径
Diameter of shank

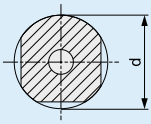

16 = 16 mm
20 = 20 mm
25 = 25 mm
atd.

3
刀柄长度
Lenght of shank

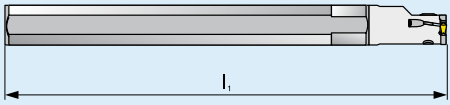

K = 125 mm	R = 200 mm
L = 140 mm	S = 250 mm
M = 150 mm	T = 300 mm
N = 160 mm	U = 350 mm
P = 170 mm	V = 400 mm
Q = 180 mm	

4
夹紧名称
Clamping designation

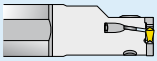

5
刀柄主偏角
Toolholders setting angle

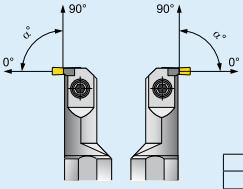

α	
G = 0°	K = 75°
R = 15°	F = 90°
T = 30°	B = 105°
S = 45°	E = 120°
W = 60°	D = 135°

6
最大切槽 (车削)
Maximal grooving (turning)

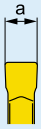

E = 1.0 × a	J = 3.5 × a
F = 1.5 × a	K = 4.0 × a
G = 2.0 × a	L = 4.5 × a
H = 2.5 × a	M = 5.0 × a
I = 3.0 × a	N = 5.5 × a
X = Speciál	

7
刀柄类别 (右/左)
Version (right/left)

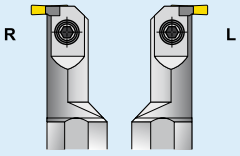

8
切削刃长度
Cutting edge lenght

	a [mm]
0313	3.0
0413	4.0

GFIR/L. GFKR/L

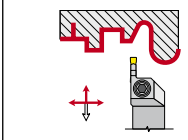

121

GFIR 03 AXIAL

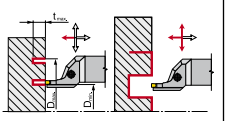

122

GFIR 04 AXIAL

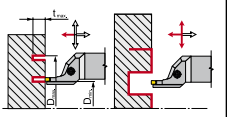

123

GGIR AXIAL 90°

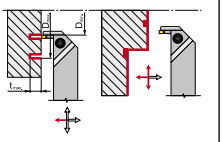

124

GG.R/L INT

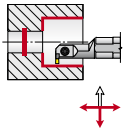

125

GLCCR/L

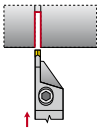

126

GLXCL

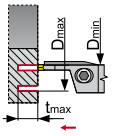

127

MS - EN

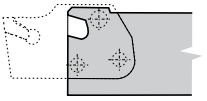

128

XLCFN/R/L

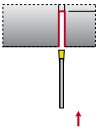

129

XLXFL

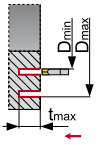

130

XLCFR/L

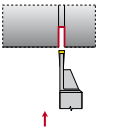

131

XLCFR/L

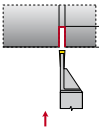

132

XLCFN

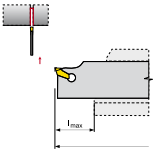

133

XLCFN DU

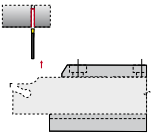

134

XLCFN

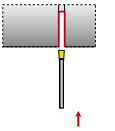

135

XLCFN

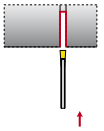

136

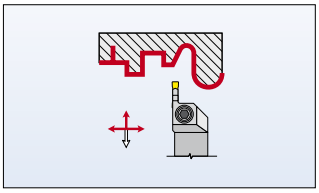

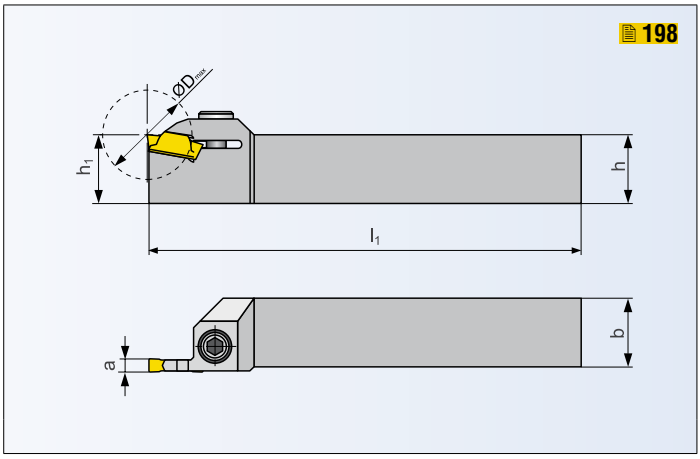

刀柄，用于外圆车削 / HOLDER FOR EXTERNAL TURNING

ISO	R/L	尺寸 / Dimensions [mm]										kg	备件 Spare parts	刀片 Inserts
		h=h1	b	l1	a	Dmax								
GFIR/L 1616 H 03	●/●	16	16	100	3	18						0.30	GL03	LCMF 0316..
GFIR/L 2020 K 03	●/●	20	20	125	3	18						0.40	GL04	LCMF 0316..
GFIR/L 2525 M 03	●/●	25	25	150	3	18						0.60	GL05	LCMF 0316..
GFIR/L 1616 H 04	●/●	16	16	100	4	24						0.30	GL03	LCMF 0416..
GFIR/L 2020 K 04	●/●	20	20	125	4	24						0.40	GL04	LCMF 0416..
GFIR/L 2525 M 04	●/●	25	25	150	4	24						0.60	GL05	LCMF 0416..
GFIR/L 2020 K 05	●/○	20	20	125	5	28						0.40	GL04	LCMF 0516..
GFIR/L 2525 M 05	●/●	25	25	150	5	28						0.60	GL05	LCMF 0516..
GFIR/L 2020 K 06	●/○	20	20	125	6	28						0.40	GL04	LCMF 0616..
GFIR/L 2525 M 06	●/●	25	25	150	6	28						0.60	GL05	LCMF 0616..
GFKR/L 1616 H 02	●/●	16	16	100	2	32						0.30	GL03	LCMF 0220..
GFKR/L 2020 K 02	●/●	20	20	125	2	32						0.40	GL04	LCMF 0220..
GFKR/L 2525 M 02	●/●	25	25	150	2	32						0.60	GL05	LCMF 0220..

备件 / SPARE PARTS

类型 Type	螺钉 Screw	扳手 Key				
GL03	HS 0616C	HXK 5				
GL04	HS 0620C	HXK 5				
GL05	HS 0625C	HXK 5				

● 标准库存产品 / Stock Assortiment　　○ 非标准库存产品 / Non-stock Assortiment　　所有尺寸 / All dimensions [mm]

GFIR/L 03

切断和切槽刀具
PARTING AND GROOVING TOOLS

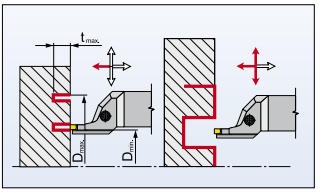

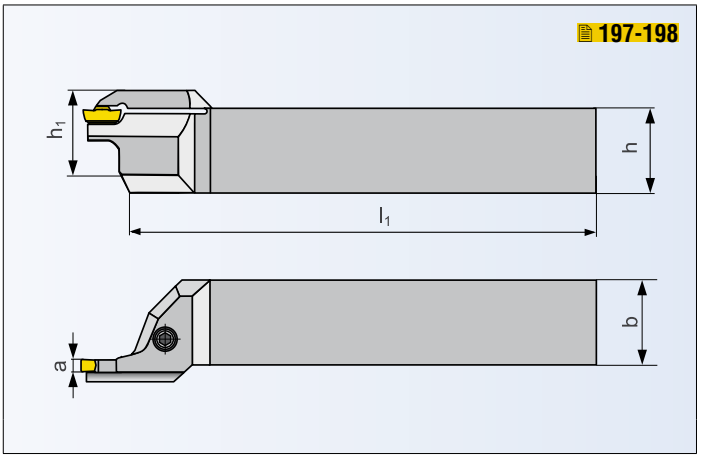

刀具，用于端面车削 / TOOL FOR FACE TURNING

ISO		尺寸 / Dimensions [mm]										kg	备件 Spare parts	刀片 Inserts
		$h=h_1$	b	l_1	a	t_{max}	D_{min}	D_{max}						
GFIR 2525 M 03L 030017-A	○	25	25	150	3	9.5	17	30				0.75	GL07	LCMF 0313..
GFIR 2525 M 03L 039024-A	○	25	25	150	3	9.5	24	39				0.75	GL07	LCMF 0313..
GFIR 2525 M 03L 050033-A	○	25	25	150	3	11	33	50				0.75	GL07	LCMF 0313..
GFIR 2525 M 03L 060043-A	○	25	25	150	3	11	43	60				0.75	GL07	LCMF 0313..
GFIR 2525 M 03L 076053-A	○	25	25	150	3	11	53	76				0.75	GL07	LCMF 0313..
GFIR 2525 M 03L 100070-A	○	25	25	150	3	9	70	100				0.75	GL08	LCMF 0316..
GFIR 2525 M 03L 130090-A	○	25	25	150	3	9	90	130				0.75	GL08	LCMF 0316..
GFIR 2525 M 03L 170110-A	○	25	25	150	3	9	110	170				0.75	GL08	LCMF 0316..
GFIL 2525 M 03R 030017-A	●	25	25	150	3	9.5	17	30				0.75	GL07	LCMF 0313..
GFIL 2525 M 03R 039024-A	●	25	25	150	3	9.5	24	39				0.75	GL07	LCMF 0313..
GFIL 2525 M 03R 050033-A	●	25	25	150	3	11	33	50				0.75	GL07	LCMF 0313..
GFIL 2525 M 03R 060043-A	●	25	25	150	3	11	43	60				0.75	GL07	LCMF 0313..
GFIL 2525 M 03R 076053-A	○	25	25	150	3	11	53	76				0.75	GL07	LCMF 0313..
GFIL 2525 M 03R 100070-A	○	25	25	150	3	9	70	100				0.75	GL08	LCMF 0316..
GFIL 2525 M 03R 130090-A	○	25	25	150	3	9	90	130				0.75	GL08	LCMF 0316..
GFIL 2525 M 03R 170110-A	○	25	25	150	3	9	110	170				0.75	GL08	LCMF 0316..

备件 / SPARE PARTS

类型 Type	螺钉 Screw	螺丝刀 Screwdriver				
GL07	US 5018-T20P	SDR T20P				
GL08	US 6020-T25P	SDR T25P				

● 标准库存产品 / Stock Assortiment　　○ 非标准库存产品 / Non-stock Assortiment　　所有尺寸 / All dimensions [mm]

PRAMET

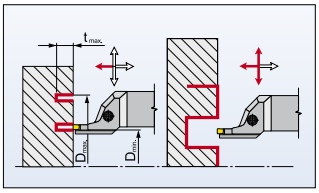

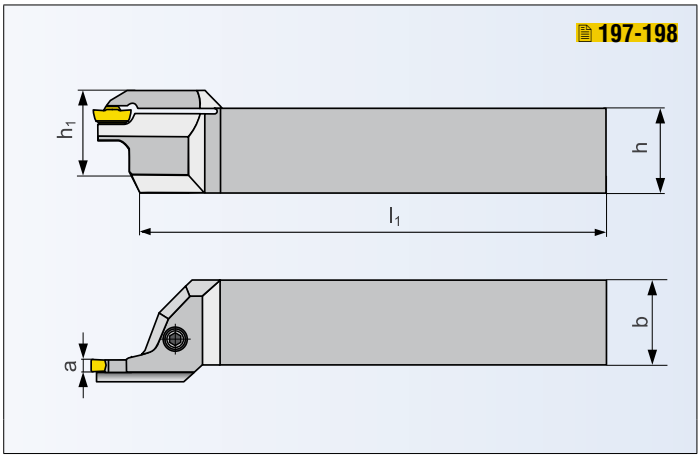

刀具，用于端面车削 / TOOL FOR FACE TURNING

ISO		尺寸 / Dimensions [mm]										kg	备件 Spare parts	刀片 Inserts
		$h=h_1$	b	l_1	a	t_{max}	D_{min}	D_{max}						
GFIR 2525 M 04L 030017-A	○	25	25	150	4	9.5	17	30				0.75	GL07	LCMF 0413..
GFIR 2525 M 04L 034021-A	○	25	25	150	4	9.5	21	34				0.75	GL07	LCMF 0413..
GFIR 2525 M 04L 040026-A	○	25	25	150	4	11	26	40				0.75	GL07	LCMF 0413..
GFIR 2525 M 04L 050032-A	○	25	25	150	4	11	32	50				0.75	GL07	LCMF 0413..
GFIR 2525 M 04L 060042-A	○	25	25	150	4	11	42	60				0.75	GL07	LCMF 0413..
GFIR 2525 M 04L 075052-A	○	25	25	150	4	11	52	75				0.75	GL07	LCMF 0413..
GFIR 2525 M 04L 100070-A	○	25	25	150	4	12	70	100				0.75	GL08	LCMF 0416..
GFIR 2525 M 04L 130090-A	○	25	25	150	4	12	90	130				0.75	GL08	LCMF 0416..
GFIR 2525 M 04L 170110-A	○	25	25	150	4	12	110	170				0.75	GL08	LCMF 0416..
GFIR 2525 M 04L 230140-A	○	25	25	150	4	12	140	230				0.75	GL08	LCMF 0416..
GFIL 2525 M 04R 030017-A	○	25	25	150	4	9.5	17	30				0.75	GL07	LCMF 0413..
GFIL 2525 M 04R 034021-A	○	25	25	150	4	9.5	21	34				0.75	GL07	LCMF 0413..
GFIL 2525 M 04R 040026-A	○	25	25	150	4	11	26	40				0.75	GL07	LCMF 0413..
GFIL 2525 M 04R 050032-A	○	25	25	150	4	11	32	50				0.75	GL07	LCMF 0413..
GFIL 2525 M 04R 060042-A	○	25	25	150	4	11	42	60				0.75	GL07	LCMF 0413..
GFIL 2525 M 04R 075052-A	○	25	25	150	4	11	52	75				0.75	GL07	LCMF 0413..
GFIL 2525 M 04R 100070-A	●	25	25	150	4	12	70	100				0.75	GL08	LCMF 0416..
GFIL 2525 M 04R 130090-A	●	25	25	150	4	12	90	130				0.75	GL08	LCMF 0416..
GFIL 2525 M 04R 170110-A	●	25	25	150	4	12	110	170				0.75	GL08	LCMF 0416..
GFIL 2525 M 04R 230140-A	●	25	25	150	4	12	140	230				0.75	GL08	LCMF 0416..

备件 / SPARE PARTS

类型 Type	螺钉 Screw	螺丝刀 Screwdriver				
GL07	US 5018-T20P	SDR T20P				
GL08	US 6020-T25P	SDR T25P				

● 标准库存产品 / Stock Assortiment ○ 非标准库存产品 / Non-stock Assortiment 所有尺寸 / All dimensions [mm]

GGIR/L - 90°

切断和切槽刀具
PARTING AND GROOVING TOOLS

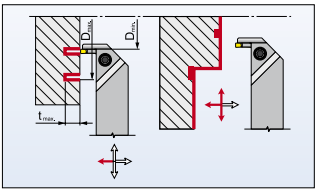

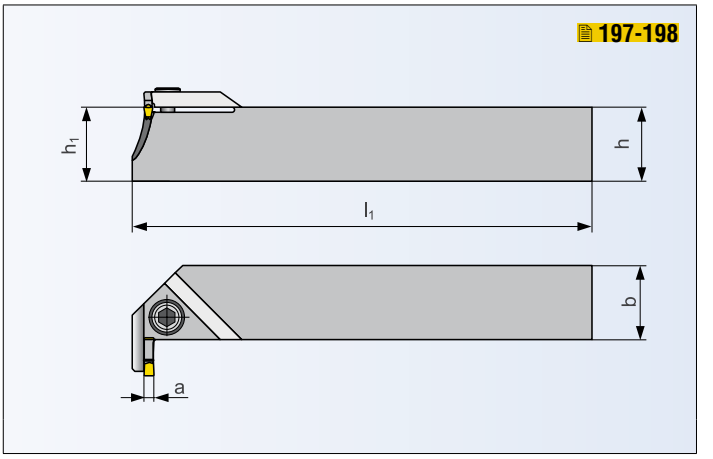

刀具，用于端面车削 / TOOL FOR FACE TURNING - 90°

ISO		尺寸 / Dimensions [mm]										kg	备件 Spare parts	刀片 Inserts
		$h=h_1$	b	l_1	a	t_{max}	D_{min}	D_{max}						
GGIR 2525 M 03R 030017	●	25	25	150	3	9.5	17	30				0.80	GL01	LCMF 0313..
GGIR 2525 M 03R 039024	●	25	25	150	3	9.5	24	39				0.80	GL01	LCMF 0313..
GGIR 2525 M 03R 050033	●	25	25	150	3	11	33	50				0.80	GL01	LCMF 0313..
GGIR 2525 M 03R 060043	●	25	25	150	3	11	43	60				0.80	GL01	LCMF 0313..
GGIR 2525 M 03R 076053	●	25	25	150	3	11	53	76				0.80	GL01	LCMF 0313..
GGIR 2525 M 03R 100070	○	25	25	150	3	9	70	100				0.80	GL04	LCMF 0316..
GGIR 2525 M 03R 130090	○	25	25	150	3	9	90	130				0.80	GL04	LCMF 0316..
GGIR 2525 M 03R 170110	○	25	25	150	3	9	110	170				0.80	GL04	LCMF 0316..
GGIL 2525 M 03L 030017	○	25	25	150	3	9.5	17	30				0.80	GL01	LCMF 0313..
GGIL 2525 M 03L 039024	○	25	25	150	3	9.5	24	39				0.80	GL01	LCMF 0313..
GGIL 2525 M 03L 050033	○	25	25	150	3	11	33	50				0.80	GL01	LCMF 0313..
GGIL 2525 M 03L 060043	○	25	25	150	3	11	43	60				0.80	GL01	LCMF 0313..
GGIL 2525 M 03L 076053	○	25	25	150	3	11	53	76				0.80	GL01	LCMF 0313..
GGIL 2525 M 03L 100070	○	25	25	150	3	9	70	100				0.80	GL04	LCMF 0316..
GGIL 2525 M 03L 130090	○	25	25	150	3	9	90	130				0.80	GL04	LCMF 0316..
GGIL 2525 M 03L 170110	○	25	25	150	3	9	110	170				0.80	GL04	LCMF 0316..

备件 / SPARE PARTS

类型 Type	螺钉 Screw	扳手 Key				
GL01	HS 0520C	HXK 4				
GL04	HS 0620C	HXK 5				

● 标准库存产品 / Stock Assortment ○ 非标准库存产品 / Non-stock Assortment 所有尺寸 / All dimensions [mm]

PRAMET

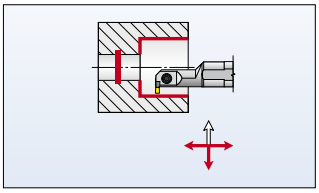

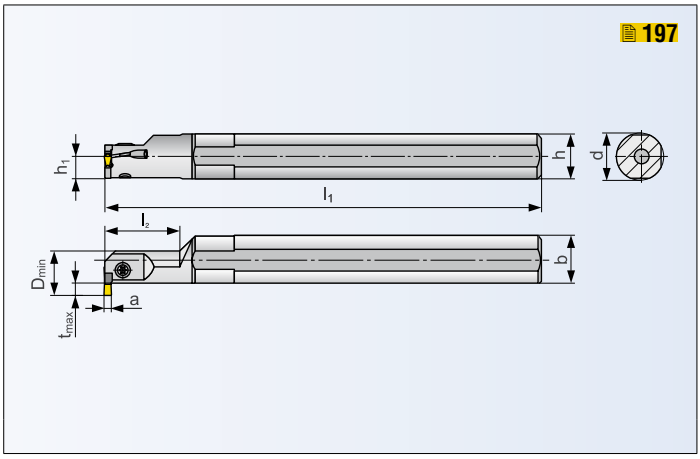

刀具，用于端面车削 / TOOL FOR FACE TURNING

ISO	R/L	尺寸 / Dimensions [mm]										kg	备件 Spare parts	刀片 Inserts
		d	h	h_1	b	l_1	l_2	a	t_{max}	D_{min}				
A16Q-GGER/L 0313	● / ●	16	15	7.5	15.5	180	25	3	3	16		0.30	GL06	LCMF 0313..
A20R-GGFR/L 0313	● / ●	20	18	9.0	19	200	30	3	5.5	20		0.40	GL06	LCMF 0313..
A25S-GGHR/L 0313	● / ●	25	23	11.5	24	250	40	3	7.5	25		0.75	GL06	LCMF 0313..
A25S-GGFR/L 0413	● / ●	25	23	11.5	24	250	40	4	7.5	25		0.75	GL06	LCMF 0413..
A32T-GGHR/L 0413	● / ●	32	30	15.0	31	300	50	4	10.5	32		1.55	GL06	LCMF 0413..

备件 / SPARE PARTS

类型 Type	螺钉 Screw	螺丝刀 Screwdriver				
GL06	SR 85011-T15P	SDR T15P				

● 标准库存产品 / Stock Assortiment　　○ 非标准库存产品 / Non-stock Assortiment　　所有尺寸 / All dimensions [mm]

GLCCR/L

切断和切槽刀具
PARTING AND GROOVING TOOLS

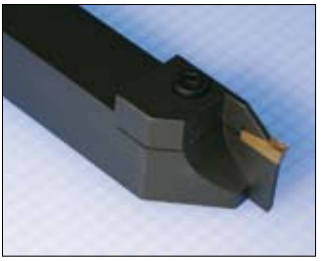

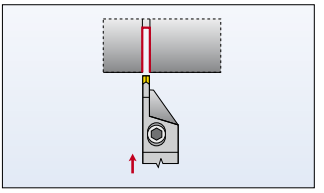

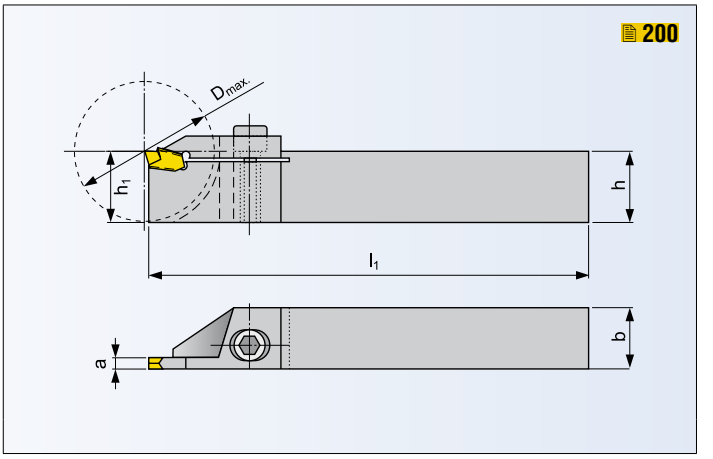

刀具，用于外圆车削 / TOOL FOR EXTERNAL TURNING

ISO	R/L	尺寸 / Dimensions [mm]										kg	备件 Spare parts	刀片 Inserts
		$h=h_1$	b	l_1	a	D_{max}								
GLCCR/L 2020 K 2.65	● / ●	20	20	130	2.65	40						0.30	ND1	LCMX 02050.
					3.15									LCMX 03050.
GLCCR/L 2020 K 4.15	● / ○	20	20	130	4.15	50						0.30	ND1	LCMX 04050.
					5.15									LCMX 05050.
GLCCR/L 2525 M 2.65	● / ●	25	25	150	2.65	40						0.50	ND2	LCMX 02050.
					3.15									LCMX 03050.
GLCCR/L 2525 M 4.15	● / ●	25	25	150	4.15	50						0.50	ND2	LCMX 04050.
					5.15									LCMX 05050.

备件 / SPARE PARTS

类型 Type	螺钉 Screw	扳手 Key				
ND1	HS 0620	HXK 5				
ND2	HS 0625	HXK 5				

● 标准库存产品 / Stock Assortment　　○ 非标准库存产品 / Non-stock Assortment　　所有尺寸 / All dimensions [mm]

PRAMET

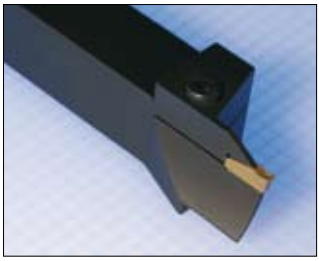

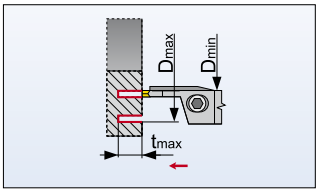

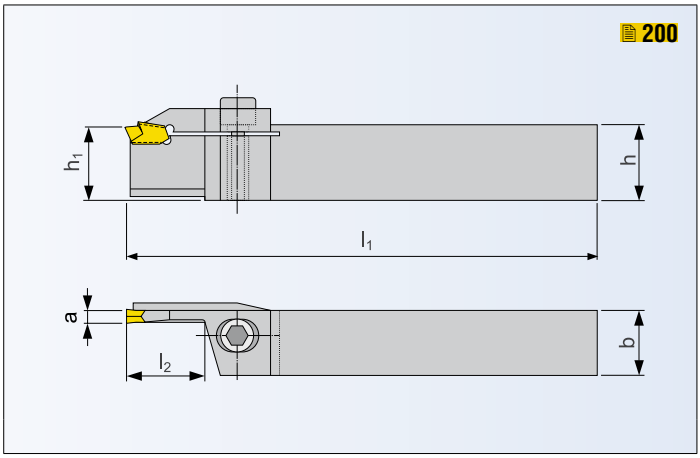

刀具，用于端面车削 / TOOL FOR FACE TURNING

ISO		尺寸 / Dimensions [mm]										kg	备件 Spare parts	刀片 Inserts
		$h=h_1$	b	l_1	l_2	a	D_{min}	D_{max}	t_{max}					
GLXCL 2525-50 M 2.65	●	25	25	150	20	2.65	50	65	18			0.5	ND2	LCMX 02050.
						3.15								LCMX 03050.
GLXCL 2525-60 M 2.65	●	25	25	150	20	2.65	60	85	18			0.5	ND2	LCMX 02050.
						3.15								LCMX 03050.
GLXCL 2525-60 M 4.15	●	25	25	150	25	4.15	60	100	23			0.5	ND2	LCMX 04050.
						5.15								LCMX 05050.
GLXCL 2525-80 M 2.65	●	25	25	150	20	2.65	80	110	18			0.5	ND2	LCMX 02050.
						3.15								LCMX 03050.
GLXCL 2525-100 M 2.65	●	25	25	150	20	2.65	100	160	18			0.5	ND2	LCMX 02050.
						3.15								LCMX 03050.
GLXCL 2525-100 M 4.15	●	25	25	150	25	4.15	100	200	23			0.5	ND2	LCMX 04050.
						5.15								LCMX 05050.
GLXCL 2525-150 M 2.65	●	25	25	150	20	2.65	150	250	18			0.5	ND2	LCMX 02050.
						3.15								LCMX 03050.
GLXCL 2525-200 M 4.15	●	25	25	150	25	4.15	200	700	23			0.5	ND2	LCMX 04050.
						5.15								LCMX 05050.

备件 / SPARE PARTS

类型 Type	螺钉 Screw	扳手 Key				
ND2	HS 0625	HXK 5				

● 标准库存产品 / Stock Assortment　　○ 非标准库存产品 / Non-stock Assortment　　所有尺寸 / All dimensions [mm]

MS-EN

切断和切槽刀具
PARTING AND GROOVING TOOLS

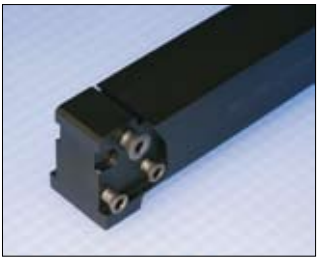

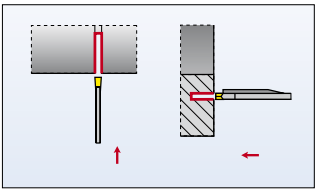

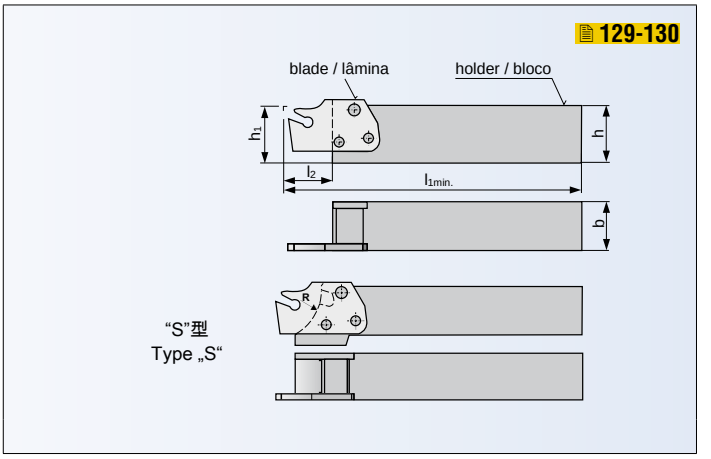

刀柄，用于外圆车削 / HOLDER FOR EXTERNAL TURNING

ISO		尺寸 / Dimensions [mm]										kg	备件 Spare parts	刀片 Inserts
		h	h_1	b	l_{1min}	l_2	R							
MS-EN-1212 F	●	12	12	12	90	15	-					0.09	ND4	XLCF. 16..15...
					95	20	-					0.09	ND4	XLCF. 16..20...
MS-EN-1616 H	●	16	16	16	95	15	-					0.19	ND4	XLCF. 16..15...
					100	20	-					0.19	ND4	XLCF. 16..20...
MS-EN-2020 K	●	20	20	20	115	15	-					0.44	ND5	XLCF. 25..15.... XLXFL 25...
					125	25	-					0.44	ND5	XLCF. 25..25...
MS-EN-2525 M	●	25	25	25	140	15	-					0.68	ND5	XLCF. 25..15.... XLXFL 25...
					150	25	-					0.68	ND5	XLCF. 25..25...
MS-EN-3225 P	●	32	32	25	160	15	-					1.05	ND5	XLCF. 25..15.... XLXFL 25...
					170	25	-					1.05	ND5	XLCF. 25..25...
MS-EN-2020 KS	○	20	20	20	115	-	25					0.48	ND5	XLCF. 25..15...
					125	-	25					0.48	ND5	XLCF. 25..25...
MS-EN-2525 MS	●	25	25	25	140	-	25					0.72	ND5	XLCF. 25..15...
					150	-	25					0.72	ND5	XLCF. 25..25...
MS-EN-3225 PS	○	32	32	25	160	-	25					1.10	ND5	XLCF. 25..15...
					170	-	25					1.10	ND5	XLCF. 25..25...

备件 / SPARE PARTS

Type Tipo	夹紧螺钉 Clamp. Screw	夹紧螺钉 Clamp. Screw	螺丝刀 Screwdriver			
ND4	3x US 4011-T15P		SDR T15P			
ND5	2x US 45013-T20P	US 46017-T20P	SDR T20P			

● 标准库存产品 / Stock Assortment ○ 非标准库存产品 / Non-stock Assortment 所有尺寸 / All dimensions [mm]

PRAMET

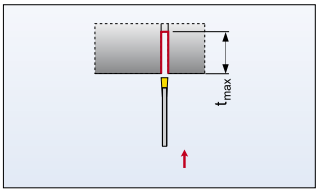

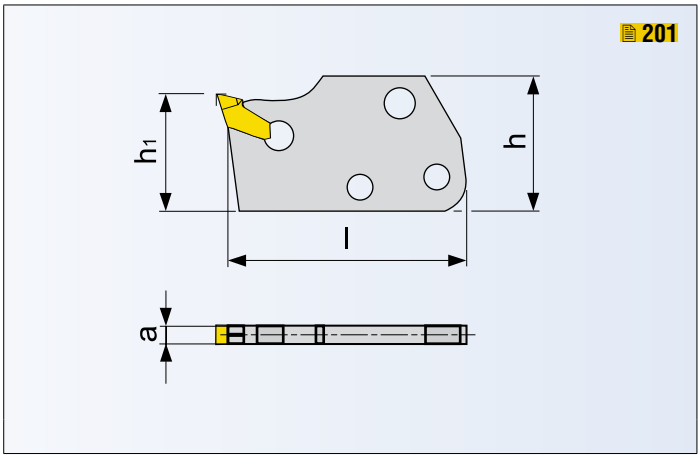

刀片，用于外圆车削 / BLADE FOR EXTERNAL TURNING

ISO	R/L	尺寸 / Dimensions [mm]										kg	备件 Spare parts	刀片 Inserts
		h	h_1	l	a	t_{max}								
XLCFR/L 160115-1.60	●/●	25	12	35	1.60	15						0.01	KV	LFMX 1.60.....
XLCFR/L 160115-2.00	●/●	25	12	35	2.0	15						0.01	KV	LFMX 2.00.... LFMX 2.20...
					2.2									LFMX 2.00.... LFMX 2.20…
XLCFN 160215-3.00	●	25	12	35	3.1	15						0.01	KV	LFMX 3.10.....
XLCFN 160220-3.00	●	25	12	40	3.1	20						0.02	KV	LFMX 3.10.....
XLCFR/L 250115-1.60	●/●	29	24	40	1.6	15						0.01	KV	LFMX 1.60.....
XLCFR/L 250115-2.00	●/●	29	24	40	2.0	15						0.02	KV	LFMX 2.00.... LFMX 2.20...
					2.2									LFMX 2.00.... LFMX 2.20…
XLCFN 250215-3.00	●	29	24	40	3.1	15						0.02	KV	LFMX 3.10.....
XLCFN 250225-3.00	●	29	24	50	3.1	25						0.02	KV	LFMX 3.10.....
XLCFN 250315-4.00	●	29	24	40	4.1	15						0.02	KV	LFMX 4.10.....
XLCFN 250325-4.00	●	29	24	50	4.1	25						0.03	KV	LFMX 4.10.....
XLCFN 250425-5.00	●	29	24	50	5.1	25						0.04	KV	LFMX 5.10.....
XLCFN 250525-6.35	●	29	24	50	6.35	25						0.04	KV	LFMX 6.35.....

备件 / SPARE PARTS

类型 Type	拔出器 Extractor					
KV	KV 5x70					

● 标准库存产品 / Stock Assortment　　○ 非标准库存产品 / Non-stock Assortment　　所有尺寸 / All dimensions [mm]

XLXFL

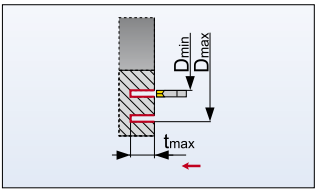

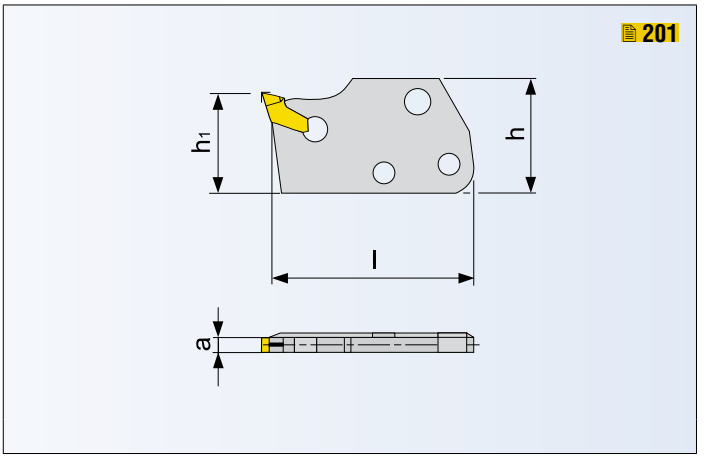

刀片，用于端面车削 / BLADE FOR FACE TURNING

ISO		尺寸 / Dimensions [mm]										kg	备件 Spare parts	刀片 Inserts
		h	h_1	l	a	t_{max}	D_{min}	D_{max}						
XLXFL 250220-3.00-60	●	29	24	46	3.1	20	60	85				0.03	KV	LFMX 3.10...
XLXFL 250220-3.00-80	●	29	24	46	3.1	20	80	105				0.02	KV	LFMX 3.10...
XLXFL 250220-3.00-100	●	29	24	46	3.1	20	100	155				0.02	KV	LFMX 3.10...
XLXFL 250220-3.00-150	●	29	24	46	3.1	20	150	280				0.02	KV	LFMX 3.10...

备件 / SPARE PARTS

类型 Type	拔出器 Extractor					
KV	KV 5x70					

● 标准库存产品 / Stock Assortiment　　○ 非标准库存产品 / Non-stock Assortiment　　所有尺寸 / All dimensions [mm]

PRAMET

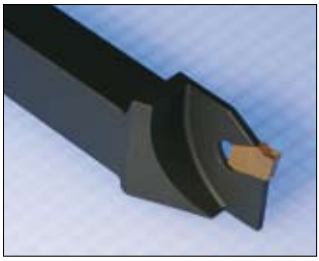

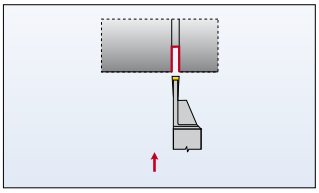

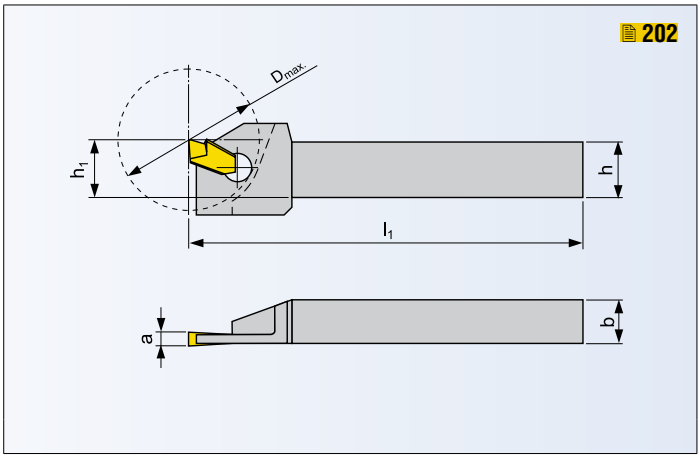

刀片，用于端面车削 / BLADE FOR FACE TURNING

ISO	R/L	尺寸 / Dimensions [mm]										kg	备件 Spare parts	刀片 Inserts
		h=h1	b	l1	a	Dmax								
XLCFR/L 1612 H 03	● / ●	16	12	100	3	40						0.15	KV	LFUX 03080.
XLCFR/L 2016 K 03	● / ●	20	16	130	3	50						0.30	KV	LFUX 03080.
XLCFR/L 2016 K 04	● / ●	20	16	130	4	50						0.30	KV	LFUX 04080.

备件 / SPARE PARTS

类型 Type	拔出器 Extractor					
KV	KV 5x70					

● 标准库存产品 / Stock Assortiment ○ 非标准库存产品 / Non-stock Assortiment 所有尺寸 / All dimensions [mm]

XLCFR/L

切断和切槽刀具
PARTING AND GROOVING TOOLS

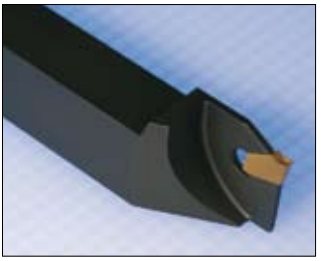

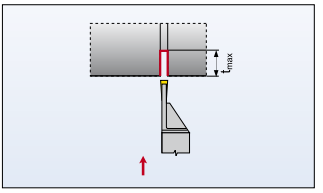

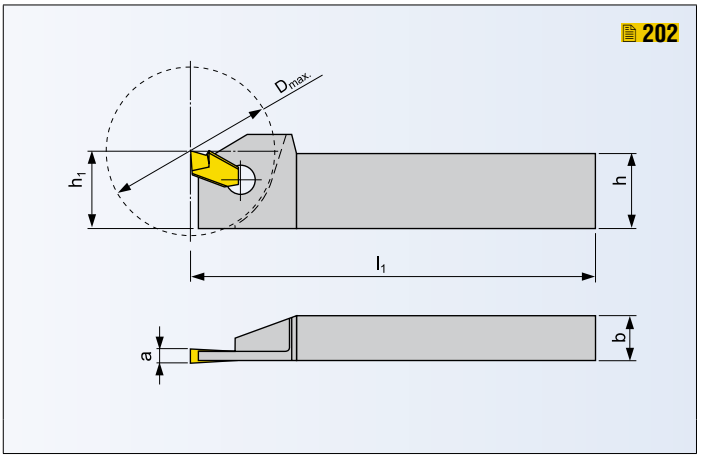

刀具，用于外圆车削 / TOOL FOR EXTERNAL TURNING

ISO	R/L	尺寸 / Dimensions [mm]										kg	备件 Spare parts	刀片 Inserts
		$h=h_1$	b	l_1	a	D_{max}								
XLCFR/L 2520 K 03	● / ●	25	20	130	3	50						0.15	KV	LFUX 03080.
XLCFR/L 2520 K 04	● / ●	25	20	130	4	50						0.50	KV	LFUX 04080.
XLCFR/L 2520 K 05	● / ●	25	20	130	5	50						0.50	KV	LFUX 05080.
XLCFR/L 3225 P 05	● / ○	32	25	170	5	65						1.00	KV	LFUX 05080.
XLCFR/L 3225 P 06	● / ●	32	25	170	6	65						1.00	KV	LFUX 06080.

备件 / SPARE PARTS

类型 Type	拔出器 Extractor					
KV	KV 5x70					

● 标准库存产品 / Stock Assortiment ○ 非标准库存产品 / Non-stock Assortiment

所有尺寸 / All dimensions [mm]

PRAMET

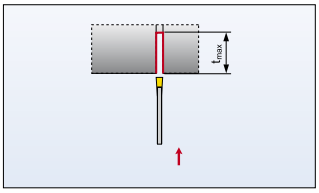

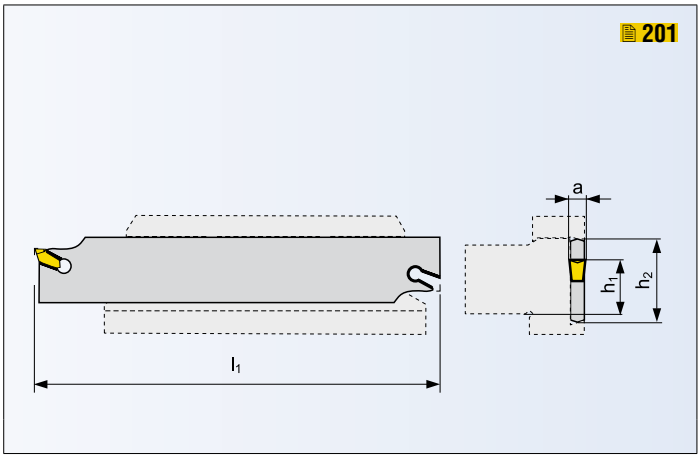

刀具，用于外圆车削 / TOOL FOR EXTERNAL TURNING

ISO		尺寸 / Dimensions [mm]									kg	备件 Spare parts	刀柄 Holder	刀片 Inserts
		h_1	h_2	l_1	a	t_{max}								
XLCFN 2601 J 1.60	●	20	26	110	1.6	15					0.03	KV	26-DU-2020	LFMX 1.60...
XLCFN 2601 J 2.00	●	20	26	110	2.0	25					0.04	KV	26-DU-2020	LFMX 2.00.... LFMX 2.20...
					2.2									LFMX 2.00.... LFMX 2.20…
XLCFN 2602 J 3.00	●	20	26	110	3.1	37.5					0.05	KV	26-DU-2020	LFMX 3.10...
XLCFN 2603 J 4.00	●	20	26	110	4.1	40					0.06	KV	26-DU-2020	LFMX 4.10...
XLCFN 3201 M 1.60	●	25	32	150	1.6	15					0.06	KV	32-DU-25..	LFMX 1.60...
XLCFN 3201 M 2.00	●	25	32	150	2.0	25					0.07	KV	32-DU-25..	LFMX 2.00.... LFMX 2.20...
					2.2									LFMX 2.00.... LFMX 2.20…
XLCFN 3202 M 3.00	●	25	32	150	3.1	50					0.08	KV	32-DU-25..	LFMX 3.10...
XLCFN 3203 M 4.00	●	25	32	150	4.1	50					0.11	KV	32-DU-25..	LFMX 4.10...
XLCFN 3204 M 5.00	●	25	32	150	5.1	60					0.14	KV	32-DU-25..	LFMX 5.10...
XLCFN 3205 M 6.35	●	25	32	150	6.35	60					0.17	KV	32-DU-25..	LFMX 6.35...
XLCFN 4502 S 3.00	●	32	45	250	3.1	80					0.12	KV	45-DU-3229	LFMX 3.10...
XLCFN 4503 S 4.00	●	32	45	250	4.1	80					0.19	KV	45-DU-3229	LFMX 4.10...
XLCFN 4504 S 5.00	●	32	45	250	5.1	80					0.28	KV	45-DU-3229	LFMX 5.10...
XLCFN 4505 S 6.35	●	32	45	250	6.35	80					0.40	KV	45-DU-3229	LFMX 6.35...

备件 / SPARE PARTS

类型 Type	拔出器 Extractor					
KV	KV 5x70					

● 标准库存产品 / Stock Assortment　　○ 非标准库存产品 / Non-stock Assortment　　所有尺寸 / All dimensions [mm]

DU

切断和切槽刀具
PARTING AND GROOVING TOOLS

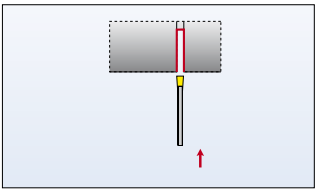

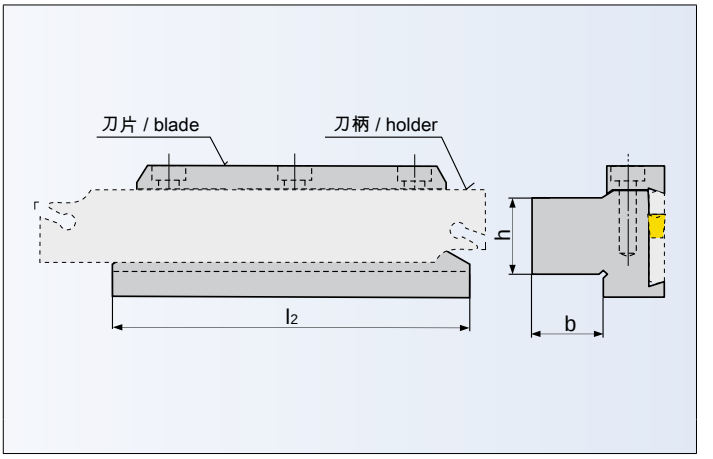

刀柄，用于外圆车削 / HOLDER FOR EXTERNAL TURNING

ISO		尺寸 / Dimensions [mm]									kg	备件 Spare parts	刀片 Blade
		h	b	l_2									
26-DU 2020	●	20	20	90							0.67	ND2	XLCFN 26....
32-DU 2523	●	25	23	110							1.00	ND2	XLCFN 32....
32-DU 2532	●	25	32	110							1.22	ND2	XLCFN 32....
32-DU 3229	●	32	29	110							1.28	ND2	XLCFN 32....
45-DU 3229	●	32	29	110							1.48	ND7	XLCFN 45....

备件 / SPARE PARTS

类型 Type	螺钉 Screw	扳手 Key	拔出器 Extractor			
ND2	HS 0625	HXK 5	-			
ND7	HS 0630	HXK 5	-			

● 标准库存产品 / Stock Assortment　　○ 非标准库存产品 / Non-stock Assortment　　所有尺寸 / All dimensions [mm]

PRAMET

XLCFN

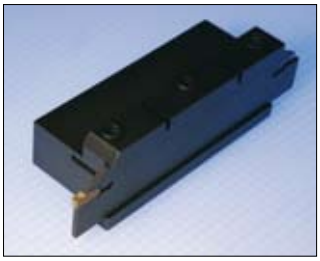

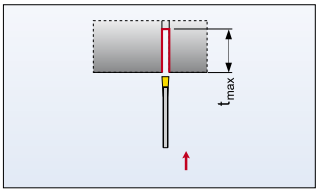

200, 202

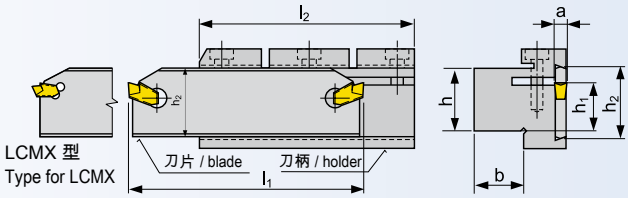

刀片，用于外圆车削 / BLADE FOR EXTERNAL TURNING

ISO		尺寸 / Dimensions [mm]									kg	备件 Spare parts	刀柄 Holder	刀片 Inserts
		h_1	h_2	l_1	a	t_{max}								
XLCFN 2602 J 2.65	●	20	26	110	2.65	35					0.05	KV	26-D2020	LCMX 02050.
XLCFN 2603 J 3.15	●	20	26	110	3.15	37.5					0.06	KV	26-D2020	LCMX 03050.
XLCFN 3202 M 2.65	●	25	32	150	2.65	40					0.08	KV	32-D2530	LCMX 02050.
XLCFN 3203 M 3.15	●	25	32	150	3.15	50					0.08	KV	32-D2530	LCMX 03050.
XLCFN 3204 M 4.15	●	25	32	150	4.15	50					0.09	KV	32-D2530	LCMX 04050.
XLCFN 2603 J 03	●	20	26	110	3	37.5					0.06	KV	26-D2020	LFUX 03080.
XLCFN 3202 M 03	●	25	32	150	3	50					0.08	KV	32-D2530	LFUX 03080.
XLCFN 3203 M 04	●	25	32	150	4	50					0.11	KV	32-D2530	LFUX 04080.
XLCFN 3204 M 05	●	25	32	150	5	60					0.14	KV	32-D2530	LFUX 05080.

刀柄，用于外圆车削 / HOLDER FOR EXTERNAL TURNING

ISO		尺寸 / Dimensions [mm]										kg	备件 Spare parts	
		h	b	l_2										
26-D 2020	●	20	20	100								0.90	ND2	
32-D 2530	●	25	30	115								1.30	ND2	

备件 / SPARE PARTS

类型 Type	螺钉 Screw	扳手 Key	拔出器 Extractor			
ND2	HS 0625	HXK 5				
KV			KV 5x70			

● 标准库存产品 / Stock Assortiment　　○ 非标准库存产品 / Non-stock Assortiment　　所有尺寸 / All dimensions [mm]

XLCFN

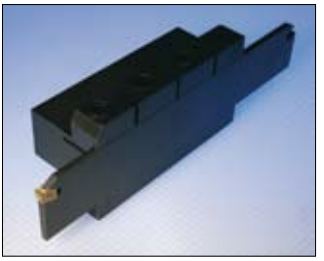

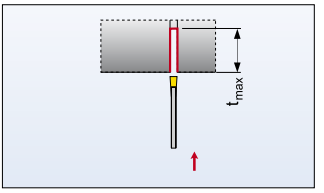

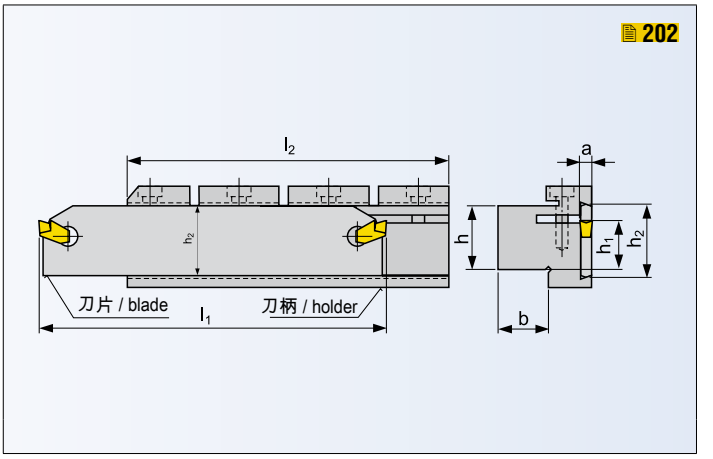

刀片，用于外圆车削 / BLADE FOR EXTERNAL TURNING

ISO		尺寸 / Dimensions [mm]									kg	备件 Spare parts	刀柄 Holder	刀片 Inserts
		h_1	h_2	l_1	a	t_{max}								
XLCFN 4704 S 05	●	38	47	270	5	100					0.40	KV	47-D4040	LFUX 050802
XLCFN 4705 S 06	●	38	47	270	6	100					0.50	KV	47-D4040	LFUX 060802

刀柄，用于外圆车削 / HOLDER FOR EXTERNAL TURNING

ISO		尺寸 / Dimensions [mm]										kg	备件 Spare parts	
		h	b	l_2										
47-D 4040	●	40	40	150								4.00	ND3	

备件 / SPARE PARTS

类型 Type	螺钉 Screw	扳手 Key	拔出器 Extractor			
ND3	HS 1030	HXK 8				
KV			KV 5x70			

● 标准库存产品 / Stock Assortiment　　○ 非标准库存产品 / Non-stock Assortiment　　所有尺寸 / All dimensions [mm]

PRAMET

1 夹紧名称 Clamping designation	
C	
P	
M	
S	

2 加工方式 Way of machining		
E	外圆 External	
I	内孔 Internal	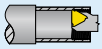

3 切削方向 Direction of cut		
R - 右 / right	外圆 External	
	内孔 Internal	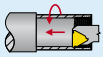
L - 左 / left	外圆 External	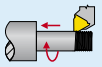
	内孔 Internal	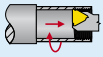

4 结构类型 Type of construction	
-	标准 / Normal
S	特殊规格 / Special

1	2	3		4	5	6	7		8
S	E	R	-	S	2525	M	16	-	

5 尺寸 [mm] Dimension [mm]		
外圆 车削 External turning	2525	25 x 25 mm
内孔 车削 Internal turning	1416	刀柄 / Shank - 14 mm 刀柄宽度 Shank width - 16 mm

7 尺寸 [mm] Dimension [mm]	
	T
d [mm]	
6.350	11
9.525	16
12.700	22

6 总长 Total lenght		
		l_1 [mm]
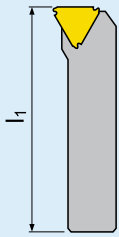	H	100
	J	110
	K	125
	L	140
	M	150
	N	160
	P	170
	Q	180
	R	200
	S	250
	T	300
	U	350
	V	400
	W	450
	X	特殊规格 Special
	Y	500

8		
	螺旋角 Helix angle	λ λ
0	螺旋角 Helix angle	λ = 0° λ = 0°
1	螺旋角 Helix angle	λ = 1° λ = 1°

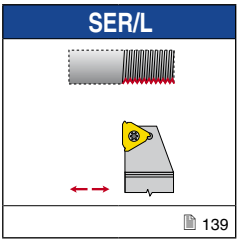

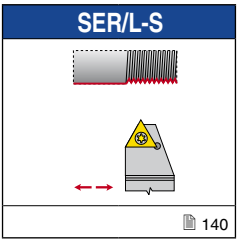

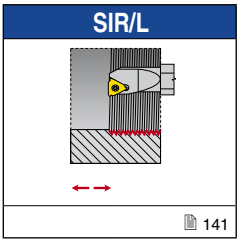

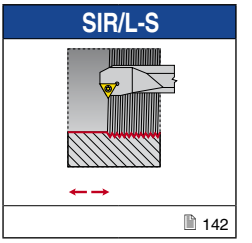

刀垫，用于刃倾角 λ 参见技术部分页面 **310**
SHIMS FOR ANGLE OF INCLINATION λ SEE TECHNICAL PART PAGE 310

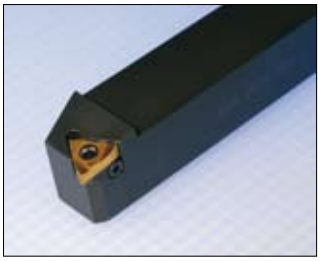

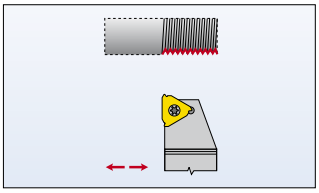

203, 207-208, 211, 213, 216-218, 221-222, 225

“可以通过改变刀垫范围 -1.5° - +4.5° 来选择螺旋角 λ，参见第 310 页”

The helix angle λ can be selected by the changing the anvil in range -1.5° - +4.5° See page 310

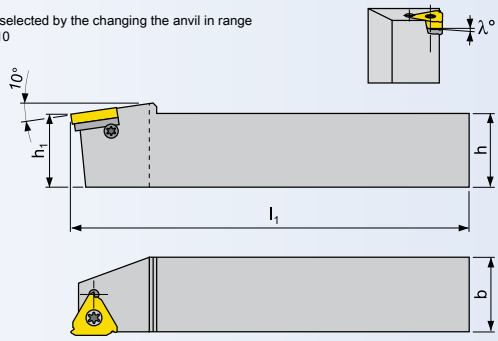

刀具，用于外圆车削 / TOOL FOR EXTERNAL TURNING

ISO	R/L	尺寸 / Dimensions [mm] h=h1	b	l1								kg	备件 Spare parts	刀片 Inserts
SER/L 2020 K 16	● / ●	20	20	125								0.50	Z12	TN 16ER/L..
SER/L 2525 M 16	● / ●	25	25	150								0.70	Z12	TN 16ER/L..
SER/L 3225 P 16	● / ●	32	25	170								0.80	Z12	TN 16ER/L..
SER/L 2525 M 22-A	● / ●	25	25	150								0.70	Z13	TN 22ER/L..
SER/L 3225 P 22-A	● / ●	32	25	170								0.80	Z13	TN 22ER/L..

备件 / SPARE PARTS

类型 Type	夹紧螺钉 Clamp. Screw	刀垫螺钉 Shim screw	螺丝刀 Screwdriver	扳手 Key	刀垫 Shim	
Z12	US 3512A-T15P	HS 0304	SDR T15P	HXK 2.5	页码 / page 310	
Z13	US 4514A-T20	SP 0405	SDR T20	-	页码 / page 310	

● 标准库存产品 / Stock Assortiment　　○ 非标准库存产品 / Non-stock Assortiment　　所有尺寸 / All dimensions [mm]

SER/L-S

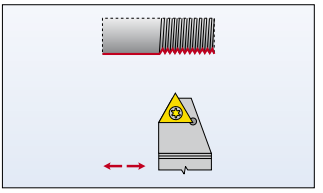

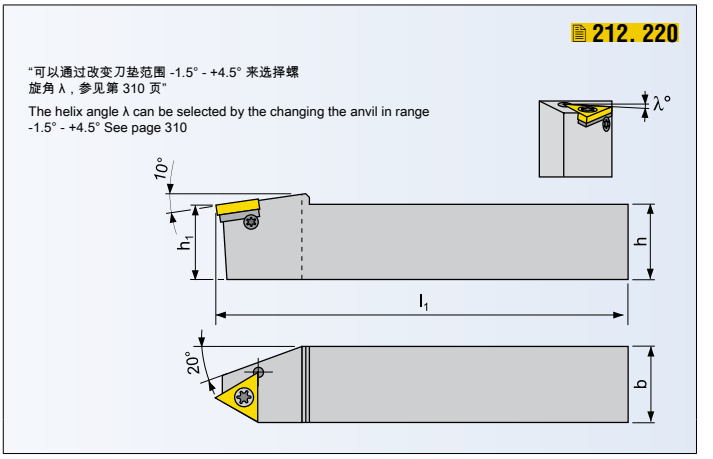

刀具，用于外圆车削 / TOOL FOR EXTERNAL TURNING

ISO	R/L	尺寸 / Dimensions [mm]										kg	备件 Spare parts	刀片 Inserts
		h=h1	b	l1										
SER/L-S 2525 M 22-A	● / ●	25	25	150								0.70	Z13	TN 22EN..
SER/L-S 3225 P 22-A	● / ●	32	25	170								0.80	Z13	TN 22EN..

备件 / SPARE PARTS

类型 Type	夹紧螺钉 Clamp. Screw	刀垫螺钉 Shim screw	螺丝刀 Screwdriver	扳手 Key	刀垫 Shim	
Z13	US 4514A-T20	SP 0405	SDR T20	-	页码 / page 310	

● 标准库存产品 / Stock Assortiment ○ 非标准库存产品 / Non-stock Assortiment 所有尺寸 / All dimensions [mm]

PRAMET

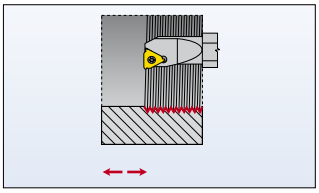

204, 209-211, 214-217, 219, 223

"可以通过改变刀垫范围 -1.5° - +4.5° 来选择螺旋角 λ，参见第 310 页"

The helix angle λ can be selected by the changing the anvil in range -1.5° - +4.5° See page 310

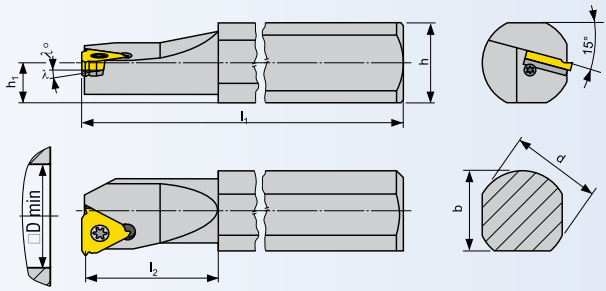

刀具，用于内孔车削 / TOOL FOR INTERNAL TURNING

ISO	R/L	尺寸 / Dimensions [mm]										kg	备件 Spare parts	刀片 Inserts
		b	d	D_{min}	h	h_1	l_1	l_2						
*SIR/L 0010 K 11-1	● / ●	14.5	16	13	14	7	125	25				0.10	Z11	TN 11NR/L.
*SIR/L 0013 M 11-1	● / ●	14.5	16	16	14	7	150	32				0.15	Z11	TN 11NR/L..
SIR/L 1416 N 16-0	● / ●	14	16	22	14.5	7.5	160	-				0.25	Z9	TN 16NR/L..
SIR/L 1416 N 16-1	● / ●	14	16	22	14.5	7.5	160	-				0.25	Z9	TN 16NR/L..
SIR/L 1820 P 16	● / ●	18.5	20	27	18	9	170	-				0.35	Z12	TN 16NR/L..
SIR/L 2325 Q 16	● / ●	23.5	25	29	23	11.5	180	-				1.00	Z12	TN 16NR/L..
SIR/L 2532 S 16	● / ●	30	32	36	25	12.5	250	-				1.70	Z12	TN 16NR/L..
SIR/L 2532 S 22-A	● / ●	30	32	36	25	12.5	250	-				1.70	Z13	TN 22NR/L..
SIR/L 3240 T 22-A	● / ●	38	40	48	32	16	300	-				2.30	Z13	TN 22NR/L..

*) 离 刀垫 / without shim

备件 / SPARE PARTS

类型 Type	夹紧螺钉 Clamp. Screw	刀垫螺钉 Shim screw	螺丝刀 Screwdriver	扳手 Key	刀垫 Shim	
Z9	US 3510A-T15P	-	SDR T15P	-	P-16	
Z11	US 2506-T07P	-	SDR T07P	-	-	
Z12	US 3512A-T15P	HS 0304	SDR T15P	HXK 2.5	页码 / page 310	
Z13	US 4514A-T20	SP 0405	SDR T20	-	页码 / page 310	

● 标准库存产品 / Stock Assortiment　　○ 非标准库存产品 / Non-stock Assortiment　　所有尺寸 / All dimensions [mm]

SIR/L-S

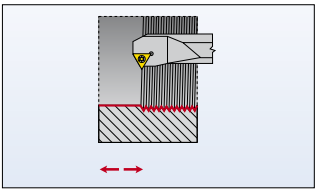

212, 220

"可以通过改变刀垫范围 -1.5° - +4.5° 来选择螺旋角 λ，参见第 310 页"

The helix angle λ can be selected by the changing the anvil in range -1.5° - +4.5° See page 310

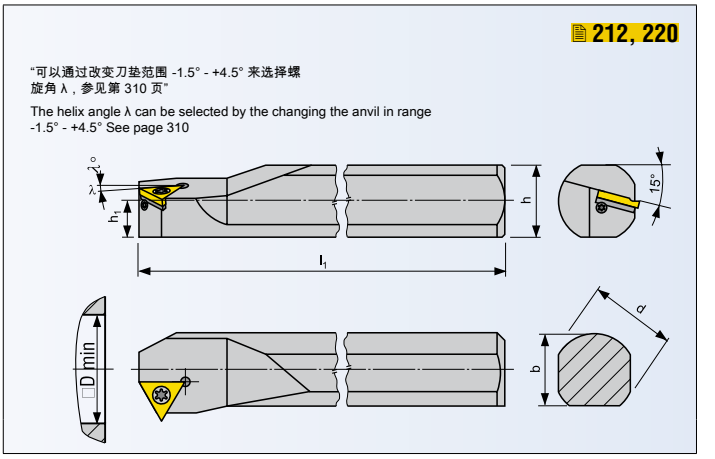

刀具，用于内孔车削 / TOOL FOR INTERNAL TURNING

ISO	R/L	尺寸 / Dimensions [mm]										kg	备件 Spare parts	刀片 Inserts
		b	d	D_{min}	h	h_1	l_1	l_2						
SIR/L-S 2532 S 22-A	● / ○	30	32	39	25	12.5	250	-					Z13	TN 22NN..
SIR/L-S 3240 T 22-A	● / ○	38	40	48	32	16	300	-					Z13	TN 22NN..

备件 / SPARE PARTS

类型 Type	夹紧螺钉 Clamp. Screw	刀垫螺钉 Shim screw	螺丝刀 Screwdriver	扳手 Key	刀垫 Shim	
Z13	US 4514A-T20	SP 0405	SDR T20	-	页码 / page 310	

● 标准库存产品 / Stock Assortiment ○ 非标准库存产品 / Non-stock Assortiment

所有尺寸 / All dimensions [mm]

PRAMET

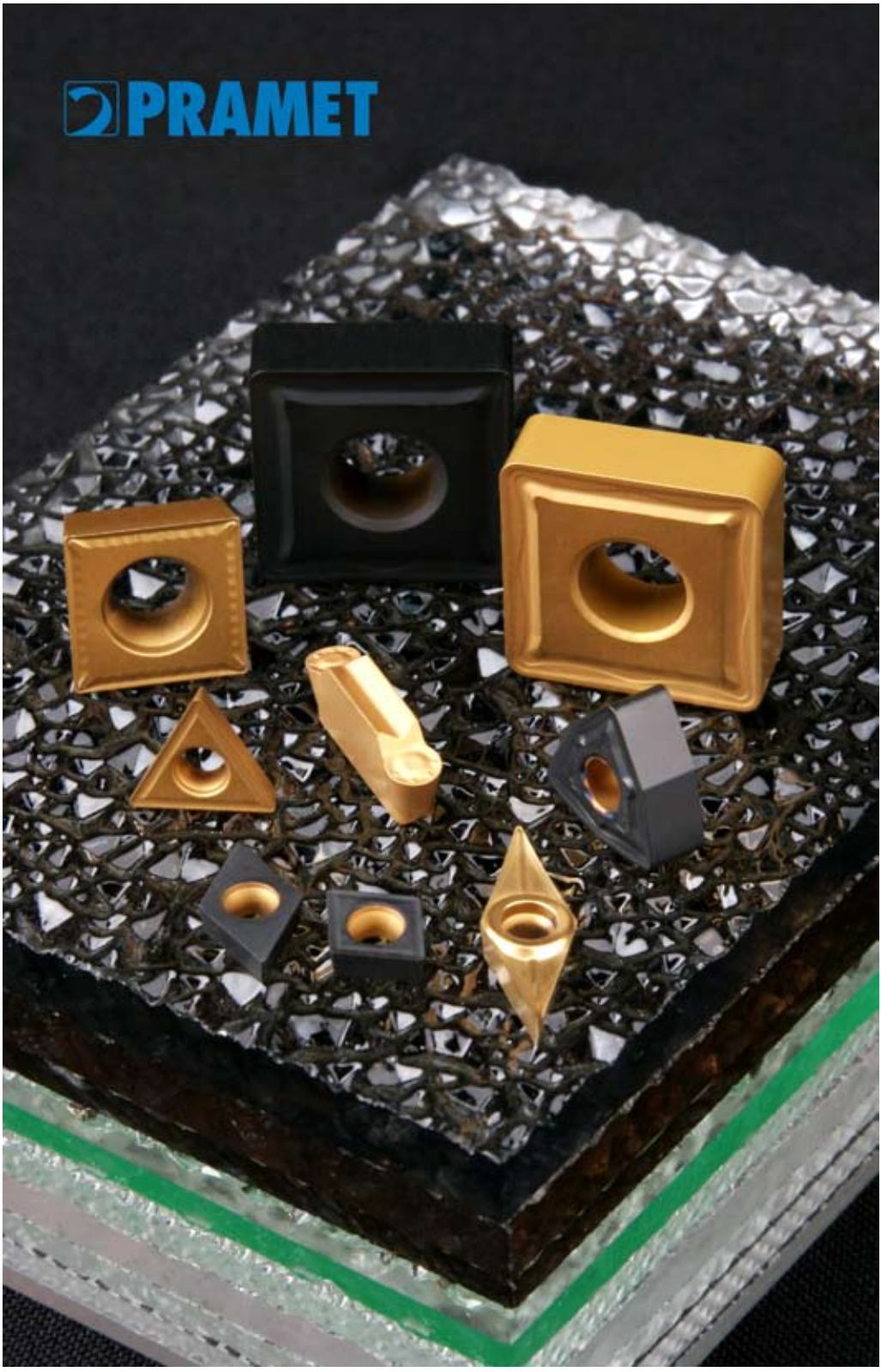
PRAMET

ISO 代码名称 - 刀片
ISO CODE DESIGNATION - INSERTS

1 刀片形状 / Insert shape

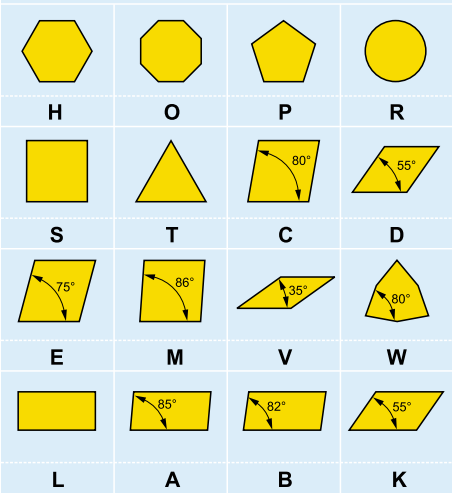

2 后角 / Clearance angle

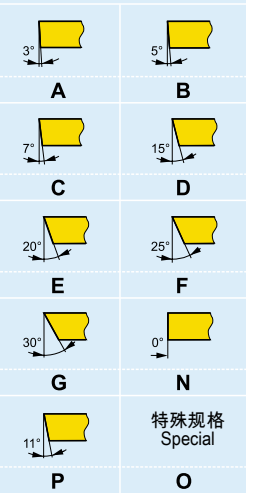

4 刀片类型 / Insert type

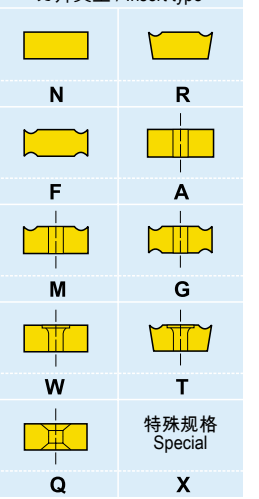

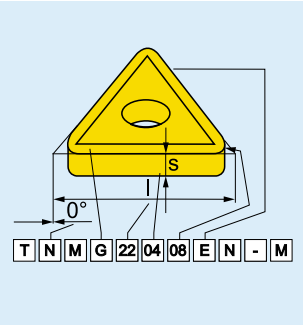

ISO 编码 ISO code

1	2	3	4
T	N	U	N
T	N	M	G

ANSI 编码 ISO code

1	2	3	4
T	N	U	N
T	N	M	G

3 公差Tolerances

符号 / Symbol	公差 (英寸) / Tolerances [Inch]			公差 (英寸) / Tolerances [Inch]		
	m (±)	s (±)	d = I.C. (±)	m (±)	s (±)	d = I.C. (±)
A	0.005	0.025	0.025	0.0002	0.001	0.0010
F	0.005	0,025	0.013	0.0002	0.001	0.0005
C	0.013	0,025	0.025	0.0005	0.001	0.0010
H	0.013	0,025	0.013	0.0005	0.001	0.0005
E	0.025	0.025	0.025	0.0010	0.001	0.0010
G	0.025	0.130	0.025	0.0010	0.005	0.0010
J	0.005	0.025	0,05 ÷ 0,13	0.0002	0.001	0,002 ÷ 0,005
K	0.013	0.025	0,05 ÷ 0,13	0.0005	0.001	0,002 ÷ 0,005
L	0.025	0.025	0,05 ÷ 0,13	0.0010	0.001	0,002 ÷ 0,005
M	0,08 ÷ 0,18	0.130	0,05 ÷ 0,13	0.003 ÷ 0,007	0.005	0,002 ÷ 0,005
N	0,08 ÷ 0,18	0.025	0,05 ÷ 0,13	0.003 ÷ 0,007	0.001	0,002 ÷ 0,005
U	0,05 ÷ 0,38	0.130	0,08 ÷ 0,25	0.005 ÷ 0,015	0.005	0,003 ÷ 0,010

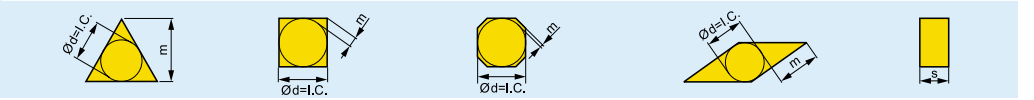

PRAMET

5

切削刃长度 / Cutting edge lenght

d=I.C. mm	Inch in	R	S	T	C	D	V	W
3.97	5/32"			06				
5.00		05						
5.56	7/32"			09				03
6.00		06						
6.35	1/4"			11	06	07		04
8.0		08						
9.525	3/8"	09	09	16	09	11	16	06
10.0		10						
12.0		12						
12.7	1/2"	12	12	22	12	15		08
15.875	5/8"	15	15	27	16			
16.0		16						
19.05	3/4"	19	19	33	19			
20.0		20						
25,0		25						
25.4	1"	25	25		25			
31.75	1 1/4"	31						
32.0		32						
38.1	1 1/2"		38					

6

厚度 / Thickness

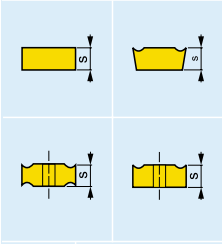

符号 Sym.	s mm	Inch/in
01	1.59	1/16"
T1	1.98	
02	2.38	3/32"
03	3.18	1/8"
T3	3.97	5/32"
04	4.76	3/16"
05	5.56	
06	6.35	1/4"
07	7.94	5/16"
09	9.52	3/8"

7

刀尖半径 / Nose radius

符号 Sym.	r_ε mm	Inch in
00	0	0"
02	0.2	
04	0.4	1/64"
08	0.8	1/32"
12	1.2	3/64"
16	1.6	1/16"
24	2.4	3/32"
32	3.2	1/8"

d=I.C.	符号 Sym.
Inch in	00
mm	M0

5	6	7	8	9		10
22	04	08				
22	04	08	E	N	-	M

5A	6A	7A	8	9		10
4	3	2				
4	3	2	E	N	-	M

ANSI 编码 / ISO code

内切圆 Inscribed circle

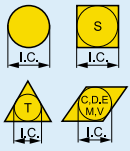

符号 Sym.	d = I.C. mm	Inch/in
1	3.175	1/8"
(1.2)	3.969	5/32"
(1.5)	4.763	3/16"
(1.8)	5.556	7/32"
2	6.350	1/4"
(2.5)	7.938	5/16"
3	9.525	3/8"
4	12.700	1/2"
5	15.875	5/8"
6	19.050	3/4"
7	22.225	7/8"
8	25.400	1"
10	31.750	1-1/4"

厚度 Thickness

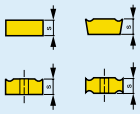

符号 Sym.	s mm	Inch/in
1	1.588	1/16"
(1.2)	1.984	5/64"
(1.5)	2.381	3/32"
2	3.175	1/8"
(2.5)	3.969	5/32"
3	4.763	3/16"
(3.5)	5.556	7/32"
4	6.350	1/4"
5	7.938	5/16"
6	9.525	3/8"
7	11.113	7/16"
8	12.700	1/2"
9	14.288	9/16"
10	15.875	5/8"

刀尖半径 Nose radius

符号 Sym.	r_ε mm	Inch/in
0	0.050	1/512"
(0.2)	0.099	1/256"
(0.5)	0.198	1/128"
1	0.397	1/64"
2	0.794	1/32"
3	1.191	3/64"
4	1.588	1/16"
5	1.984	5/64"
6	2.381	3/32"
7	2.778	7/64"
8	3.175	1/8"
10	3.969	5/32"
12	4.763	3/16"
14	5.556	7/32"
16	6.350	1/4"
x	Spec./Espec.	

8

切削刃状态 / Cutting edge condition

- **F** 锋利的切削刃 Sharp edges
- **E** 圆边 Rounded edges
- **T** 切削刃刃带宽度 Edges width facet
- **S** 圆形切削刃刃带宽度 Rounded edges width facet
- **K** 切削刃双刃带宽度 Edges width double facet
- **P** 圆形切削刃双刃带宽度 Rounded edges width double facet

9

进给方向 / Feed direction

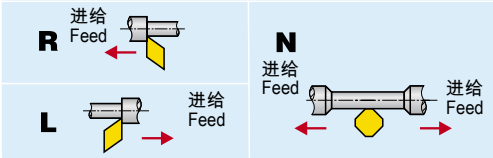

10

断屑槽名称 / Chip breaker designation

CCGT

149

CCMT

150

CCMW

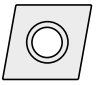

151

CNMA

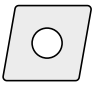

151

CNMG

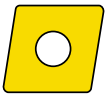

152

CNMM

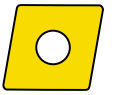

154

DCGT

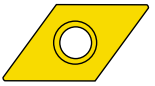

156

DCMT

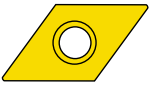

157

DCMW

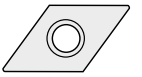

158

DNMA

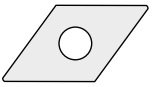

158

DNMG

159

DNMM

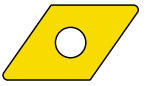

161

KNUX

162

LNUX

163

LNUX 40, 50; LNMX

164

RCGT

165

RCMT

166

RCMW

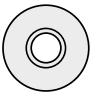

167

RCMX

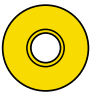

168

RCUM

169

RNMG

170

SCGT

171

SCMT

172

SCMW

173

SNMA

173

SNMG

174

SNMM

175

SNMX

177

SPMR

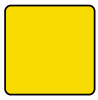

177

SPUN

178

TCGT

179

TCMT

180

TCMW

181

TNMA

181

TNMG

182

TNMM

183

TPMR

184

TPUN

185

VBMT

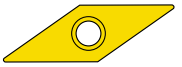

186

VCGT

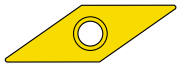

186

VCMT

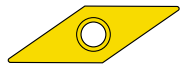

187

VCMW

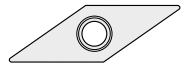

188

VNMG

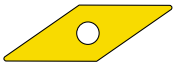

189

WCGT

190

WCMT

191

WNMA

192

WNMG

193

WNMM

195

CCGT

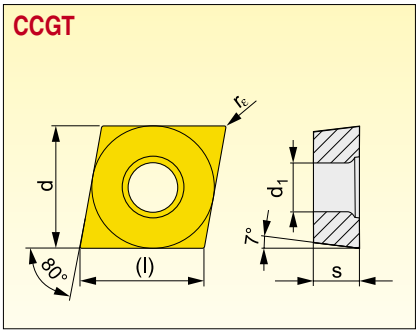

尺寸 Dimension	(l)	d	d_1	s	
0602	6.4	6.350	2.80	2.38	
09T3	9.7	9.525	4.40	3.97	
1204	12.9	12.700	5.50	4.76	

刀具 - 参见页码 / Tools - see page No.: 82-85, 102-105

断屑槽 Chip breaker	ISO	ANSI	材质等级 / Grades 8016	8030	HF7							半径 Radius r_ε	每转进给量 Feed per rev. f_{min}	f_{max}	切削深度 Cutting depth $a_{p\,min}$	$a_{p\,max}$
	CCGT 060202F-AL	CCGT 2(1.5)(0.5)F-AL	●		●							0.2	0.06	0.15	0.3	3.0
	CCGT 060204F-AL	CCGT 2(1.5)1F-AL	●		●							0.4	0.10	0.30	0.4	3.5
	CCGT 09T302F-AL	CCGT 3(2.5)(0.5)F-AL	●		●							0.2	0.10	0.15	0.3	4.0
	CCGT 09T304F-AL	CCGT 3(2.5)1F-AL	●		●							0.4	0.10	0.30	0.4	4.5
	CCGT 09T308F-AL	CCGT 3(2.5)2F-AL	●		●							0.8	0.15	0.60	0.8	5.0
	CCGT 120404F-AL	CCGT 431F-AL	●		●							0.4	0.10	0.30	0.4	7.0
	CCGT 120408F-AL	CCGT 432F-AL	●		●							0.8	0.15	0.60	0.8	7.0
	CCGT 060202ER-SI	CCGT 2(1.5)(0.5)ER-SI		○								0.2	0.08	0.15	0.4	1.6
	CCGT 060204ER-SI	CCGT 2(1.5)1ER-SI		●								0.4	0.08	0.25	0.5	1.5
	CCGT 09T304ER-SI	CCGT 3(2.5)1ER-SI		●								0.4	0.14	0.30	0.8	2.0
	CCGT 120408ER-SI	CCGT 432ER-SI		●								0.8	0.22	0.44	1.0	4.0
	CCGT 060202EL-SI	CCGT 2(1.5)(0.5)EL-SI		○								0.2	0.08	0.15	0.4	1.6
	CCGT 060204EL-SI	CCGT 2(1.5)1EL-SI		●								0.4	0.08	0.25	0.5	1.5
	CCGT 09T304EL-SI	CCGT 3(2.5)1EL-SI		●								0.4	0.14	0.30	0.8	2.0
	CCGT 120408EL-SI	CCGT 432EL-SI		●								0.8	0.22	0.44	1.0	4.0

● 标准库存产品 / Stock Assortment ○ 非标准库存产品 / Non-stock Assortment

所有尺寸 / All dimensions [mm]

CCMT

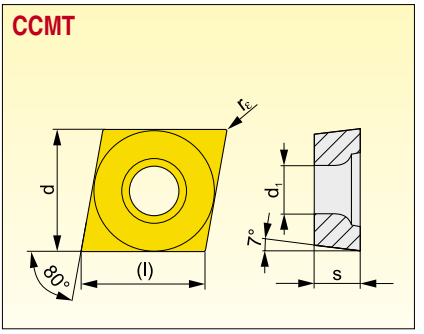

尺寸 Dimension	(l)	d	d_1	s	
0602	6.4	6.350	2.80	2.38	
09T3	9.7	9.525	4.40	3.97	
1204	12.9	12.700	5.50	4.76	

刀具 - 参见页码 / Tools - see page No.: 82-85, 102-105

断屑槽 Chip breaker	ISO	ANSI	材质等级 / Grades									半径 Radius	每转进给量 Feed per rev.		切削深度 Cutting depth	
			6605	6615	6630	6640	9210	9230	9235	8016	8030	r_ε	f_{min}	f_{max}	$a_{p\,min}$	$a_{p\,max}$
	CCMT 060202E-UM	CCMT 2(1.5)(0.5)E-UM								●	●	0.2	0.08	0.15	0.5	3.0
	CCMT 060204E-UM	CCMT 2(1.5)1E-UM			●		●	●		●	●	0.4	0.08	0.25	0.5	3.0
	CCMT 09T304E-UM	CCMT 3(2.5)1E-UM			●		●	●		●	●	0.4	0.08	0.25	0.5	3.0
	CCMT 09T308E-UM	CCMT 3(2.5)2E-UM			●		●	●		●	●	0.8	0.08	0.25	0.8	3.0
	CCMT 120404E-UM	CCMT 431E-UM			●			●			●	0.4	0.08	0.25	0.5	3.0
	CCMT 120408E-UM	CCMT 432E-UM			●		●	●			●	0.8	0.08	0.25	0.8	3.0
	CCMT 060202E-UR	CCMT 2(1.5)(0.5)E-UR			●	○		●	●	●	●	0.2	0.08	0.15	0.2	2.0
	CCMT 060204E-UR	CCMT 2(1.5)1E-UR		●	●	○	●	●	●	●	●	0.4	0.08	0.30	0.4	2.0
	CCMT 060208E-UR	CCMT 2(1.5)2E-UR		●	●		●	●			●	0.8	0.08	0.50	0.8	2.0
	CCMT 09T304E-UR	CCMT 3(2.5)1E-UR		●	●		●	●		●	●	0.4	0.08	0.30	0.4	2.0
	CCMT 09T308E-UR	CCMT 3(2.5)2E-UR		●	●		●	●		●	●	0.8	0.08	0.50	0.8	3.0
	CCMT 120404E-UR	CCMT 431E-UR		●	●		●	●				0.4	0.15	0.30	0.4	3.0
	CCMT 120408E-UR	CCMT 432E-UR		●	●		●	●				0.8	0.15	0.50	0.8	4.0
	CCMT 120412E-UR	CCMT 433E-UR		●	●		●	●				1.2	0.15	0.50	1.2	4.0
	CCMT 060202E-46	CCMT 2(1.5)(0.5)E-46				●			●			0.2	0.09	0.15	1.0	3.0
	CCMT 060204E-46	CCMT 2(1.5)1E-46	●	●	●	●	●	●	●			0.4	0.10	0.30	1.0	3.0
	CCMT 09T304E-47	CCMT 3(2.5)1E-47	●	●	●	●	●	●	●			0.4	0.10	0.30	0.8	4.0
	CCMT 09T308E-47	CCMT 3(2.5)2E-47	●	●	●	●	●	●	●			0.8	0.10	0.40	0.8	4.0
	CCMT 120404E-48	CCMT 431E-48		●	●		●	●				0.4	0.20	0.30	1.0	8.0
	CCMT 120408E-48	CCMT 432E-48	●	●	●	●	●	●	●			0.8	0.20	0.60	1.0	8.0
	CCMT 120412E-48	CCMT 433E-48	○	●			●					1.2	0.20	0.70	1.2	8.0

● 标准库存产品 / Stock Assortment ○ 非标准库存产品 / Non-stock Assortment

所有尺寸 / All dimensions [mm]

PRAMET

CCMW

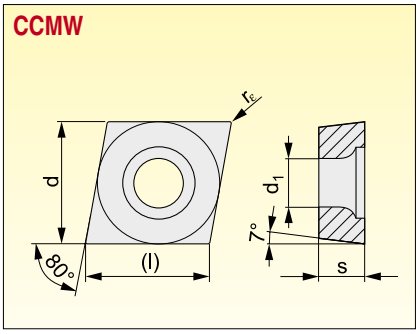

尺寸 Dimension	(l)	d	d_1	s	
0602	6.4	6.350	2.80	2.38	
09T3	9.7	9.525	4.40	3.97	
1204	12.9	12.700	5.50	4.76	

刀具 - 参见页码 / Tools - see page No.: 82-85, 102-105

断屑槽 Chip breaker	ISO	ANSI	材质等级 / Grades									半径 Radius	每转进给量 Feed per rev.		切削深度 Cutting depth	
			6605									r_ε	f_{min}	f_{max}	$a_{p\,min}$	$a_{p\,max}$
	CCMW 060202	CCMW 2(1.5)(0.5)	●									0.2	0.05	0.15	0.2	4.2
	CCMW 060204	CCMW 2(1.5)1	●									0.4	0.05	0.30	0.4	4.2
	CCMW 09T304	CCMW 3(2.5)1	●									0.4	0.05	0.30	0.4	6.3
	CCMW 09T308	CCMW 3(2.5)2	●									0.8	0.05	0.35	0.8	6.3
	CCMW 120404	CCMW 431	○									0.4	0.05	0.30	0.4	8.4
	CCMW 120408	CCMW 432	●									0.8	0.05	0.40	0.8	8.4

CNMA

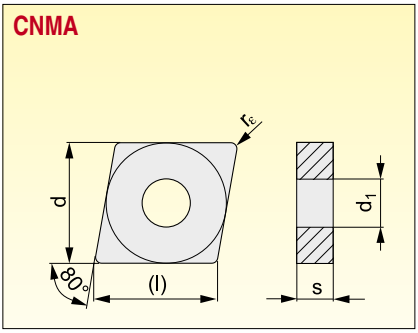

尺寸 Dimension	(l)	d	d_1	s	
1204	12.9	12.700	5.16	4.76	
1606	16.1	15.875	6.35	6.35	
1906	19.3	19.050	7.94	6.35	

刀具 - 参见页码 / Tools - see page No.: 17. 23. 30-32. 49. 57. 76. 77

断屑槽 Chip breaker	ISO	ANSI	材质等级 / Grades									半径 Radius	每转进给量 Feed per rev.		切削深度 Cutting depth	
			6605	6615								r_ε	f_{min}	f_{max}	$a_{p\,min}$	$a_{p\,max}$
	CNMA 120404	CNMA 431	●									0.4	0.10	0.30	0.4	8.4
	CNMA 120408	CNMA 432	●	●								0.8	0.10	0.60	0.8	8.4
	CNMA 120412	CNMA 433	●	●								1.2	0.10	0.60	1.2	8.4
	CNMA 160612	CNMA 543	●									1.2	0.10	0.60	1.2	8.5
	CNMA 190612	CNMA 643	●									1.2	0.10	0.90	1.2	12.7
	CNMA 190616	CNMA 644	●									1.6	0.10	0.90	1.6	12.7

● 标准库存产品 / Stock Assortiment ○ 非标准库存产品 / Non-stock Assortiment 所有尺寸 / All dimensions [mm]

CNMG

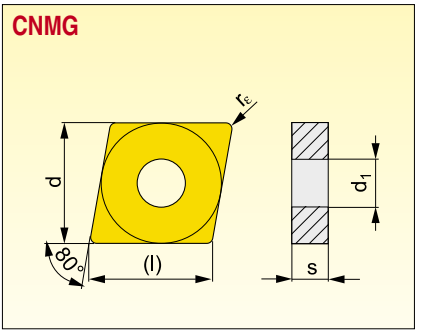

尺寸 Dimension	(l)	d	d_1	s	
0903	9.7	9.525	3.81	3.18	
1204	12.9	12.700	5.16	4.76	
1606	16.1	15.875	6.35	6.35	
1906	19.3	19.050	7.94	6.35	

刀具 - 参见页码 / Tools - see page No.: 17. 23. 30-32, 49, 57, 76, 77

断屑槽 Chip breaker	ISO	ANSI	材质等级 / Grades									半径 Radius	每转进给量 Feed per rev.		切削深度 Cutting depth	
			6605	6615	6630	6640	9210	9230	9235	8016	8030	r_ε	f_{min}	f_{max}	$a_{p\,min}$	$a_{p\,max}$
	CNMG 120404E-F	CNMG 431E-F	●	●	●			●		●	●	0.4	0.08	0.30	0.5	3.0
	CNMG 120408E-F	CNMG 432E-F		●	●			●		●	●	0.8	0.08	0.35	0.8	3.0
	CNMG 120404E-FF	CNMG 431E-FF								●		0.4	0.06	0.15	0.4	1.5
	CNMG 120408E-FF	CNMG 432E-FF								●		0.8	0.08	0.20	0.8	1.5
	CNMG 090304E-FM	CNMG 321E-FM					●	●			●	0.4	0.10	0.30	0.5	6.3
	CNMG 090308E-FM	CNMG 322E-FM					●	●			●	0.8	0.10	0.45	0.8	3.0
	CNMG 120404E-FM	CNMG 431E-FM					●	●			●	0.4	0.10	0.30	0.5	3.0
	CNMG 120408E-FM	CNMG 432E-FM					●	●			●	0.8	0.15	0.45	0.8	3.0
	CNMG 090308E-M	CNMG 322E-M					●	●	●			0.8	0.15	0.60	0.8	4.0
	CNMG 120404E-M	CNMG 431E-M		●	●		●	●				0.4	0.17	0.60	0.8	6.0
	CNMG 120408E-M	CNMG 432E-M	●	●	●	●	●	●	●	●		0.8	0.17	0.60	0.8	6.0
	CNMG 120412E-M	CNMG 433E-M	●	●	●		●	●	●			1.2	0.17	0.60	1.2	6.0
	CNMG 120416E-M	CNMG 434E-M	○	○			●	●	●			1.6	0.17	0.80	1.6	6.0
	CNMG 160608E-M	CNMG 542E-M			●		●	●	●			0.8	0.17	0.60	0.8	7.0
	CNMG 160612E-M	CNMG 543E-M			●		●	●	●			1.2	0.17	0.60	1.2	7.0
	CNMG 160616E-M	CNMG 544E-M						●	●			1.6	0.17	0.60	1.6	7.0
	CNMG 190608E-M	CNMG 642E-M			●	●	●	●	●			0.8	0.15	0.60	0.8	6.0
	CNMG 190612E-M	CNMG 643E-M		○	●	●	●	●	●			1.2	0.17	0.80	1.2	8.0
	CNMG 190616E-M	CNMG 644E-M			●		●	●	●			1.6	0.17	0.80	1.6	8.0
	CNMG 120408E-R	CNMG 432E-R	●	●	●	●	●	●	●			0.8	0.17	0.60	1.0	8.0
	CNMG 120412E-R	CNMG 433E-R	●	●	●	○	●	●	●	○		1.2	0.25	0.70	2.0	6.0
	CNMG 120416E-R	CNMG 434E-R	○	●		○	●	●	●			1.6	0.30	0.80	2.0	6.0
	CNMG 160608E-R	CNMG 542E-R	○	●	○	○	●	●	●			0.8	0.25	0.60	3.0	7.0
	CNMG 160612E-R	CNMG 543E-R	○	●	●	○	●	●	●			1.2	0.25	0.70	3.0	7.0
	CNMG 160616E-R	CNMG 544E-R	○	●			●	●	●			1.6	0.25	0.70	3.0	7.0
	CNMG 190608E-R	CNMG 642E-R	●	●	○	○	●	●	●			0.8	0.25	0.60	3.0	8.0
	CNMG 190612E-R	CNMG 643E-R	●	●	●	●	●	●	●			1.2	0.25	0.70	3.0	8.0
	CNMG 190616E-R	CNMG 644E-R	●	●	●	●	●	●	●			1.6	0.25	0.70	2.0	9.0

● 标准库存产品 / Stock Assortiment ○ 非标准库存产品 / Non-stock Assortiment

所有尺寸 / All dimensions [mm]

PRAMET

断屑槽 Chip breaker	ISO	ANSI	材质等级 / Grades									半径 Radius	每转进给量 Feed per rev.		切削深度 Cutting depth	
			6605	6615	6630	6640	9210	9230	9235	8016	8030	r_ε	f_{min}	f_{max}	$a_{p\,min}$	$a_{p\,max}$
	CNMG 120408E-DM	CNMG 432E-DM			●			●				0.8	0.15	0.60	1.0	7.0
	CNMG 160608E-DM	CNMG 542E-DM						●				0.8	0.15	0.60	1.0	7.0
	CNMG 120408W-F	CNMG 432W-F		●			●	●				0.8	0.10	0.60	0.2	4.4
	CNMG 120408W-M	CNMG 432W-M		●	●		●	●				0.8	0.15	0.60	0.8	4.0
	CNMG 120412W-M	CNMG 433W-M		●			●	●				1.2	0.20	0.90	1.2	4.0
	CNMG 120404E-NM	CNMG 431E-NM						●	●		●	0.4	0.15	0.30	0.5	3.0
	CNMG 120408E-NM	CNMG 432E-NM						●	●		●	0.8	0.20	0.40	0.8	3.0
	CNMG 120412E-NM	CNMG 433E-NM						●	●			1.2	0.20	0.40	1.2	3.5
	CNMG 160608E-NM	CNMG 542E-NM						●	●			0.8	0.25	0.50	0.8	5.0
	CNMG 160612E-NM	CNMG 543E-NM						●	●			1.2	0.25	0.50	1.2	5.0
	CNMG 190612E-NM	CNMG 643E-NM						●	●			1.2	0.30	0.50	1.2	8.0
	CNMG 120404ER-SI	CNMG 431ER-SI			○			●			●	0.4	0.20	0.30	0.8	5.0
	CNMG 120408ER-SI	CNMG 432ER-SI			○			●			●	0.8	0.20	0.50	0.8	5.0
	CNMG 120404EL-SI	CNMG 431EL-SI			○			●			●	0.4	0.20	0.30	0.8	5.0
	CNMG 120408EL-SI	CNMG 432EL-SI			○			●			●	0.8	0.20	0.50	0.8	5.0

● 标准库存产品 / Stock Assortment　　○ 非标准库存产品 / Non-stock Assortment　　所有尺寸 / All dimensions [mm]

CNMM

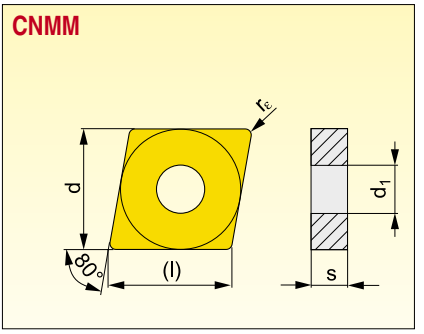

尺寸 Dimension	(l)	d	d_1	s	
1204	12.9	12.700	5.16	4.76	
1606	16.1	15.875	6.35	6.35	
1906	19.3	19.050	7.94	6.35	
2509	25.8	25.400	9.12	9.52	

刀具 - 参见页码 / Tools - see page No.: 17, 23, 30-32, 49, 56, 57, 76, 77

断屑槽 Chip breaker	ISO	ANSI	材质等级 / Grades									半径 Radius	每转进给量 Feed per rev.		切削深度 Cutting depth	
			6630	6635	6640	9210	9230	9235	8030	8040		r_ε	f_{min}	f_{max}	$a_{p\,min}$	$a_{p\,max}$
	CNMM 160612E-DR	CNMM 543E-DR	●		○		●	●				1.2	0.30	0.85	2.5	9.0
	CNMM 190608E-DR	CNMM 642E-DR	●				●					0.8	0.30	0.60	2.5	9.0
	CNMM 190612E-DR	CNMM 643E-DR	●		○		●	●				1.2	0.30	0.85	2.5	9.0
	CNMM 190616E-DR	CNMM 644E-DR	●		○		●	●				1.6	0.30	0.85	2.5	9.0
	CNMM 190616E-HR	CNMM 644E-HR	●		●		●	●		●		1.6	0.50	1.20	5.0	13.3
	CNMM 190624E-HR	CNMM 646E-HR	●		○		●	●		●		2.4	0.50	1.40	5.0	13.3
	CNMM 250924E-HR	CNMM 866E-HR	●		●		●	●		●		2.4	0.50	1.40	5.0	14.0
	CNMM 120408E-NR	CNMM 432E-NR	●		●		●	●	●			0.8	0.25	0.60	1.0	8.4
	CNMM 120412E-NR	CNMM 433E-NR	○		●		●	●	○			1.2	0.25	0.80	1.2	8.4
	CNMM 120408E-NR2	CNMM 432E-NR2		○			●	●				0.8	0.25	0.55	0.8	7.5
	CNMM 120412E-NR2	CNMM 433E-NR2					●	●				1.2	0.28	0.70	1.2	7.5
	CNMM 160608E-NR2	CNMM 542E-NR2					●	●				0.8	0.30	0.60	1.0	9.5
	CNMM 160612E-NR2	CNMM 543E-NR2					●	●				1.2	0.35	0.65	1.5	9.5
	CNMM 160616E-NR2	CNMM 544E-NR2					●	●				1.6	0.35	0.80	2.0	9.5
	CNMM 190612E-NR2	CNMM 643E-NR2		○			●	●				1.2	0.35	0.90	1.5	12.0
	CNMM 190616E-NR2	CNMM 644E-NR2	○	○			●	●				1.6	0.40	1.00	2.0	12.0
	CNMM 190624E-NR2	CNMM 646E-NR2					●	●				2.4	0.40	1.20	2.5	12.0
	CNMM 250924E-NR2	CNMM 866E-NR2	○				●	●				2.4	0.40	1.20	2.5	16.0

● 标准库存产品 / Stock Assortment ○ 非标准库存产品 / Non-stock Assortment

所有尺寸 / All dimensions [mm]

PRAMET

断屑槽 Chip breaker	ISO	ANSI	材质等级 / Grades									半径 Radius	每转进给量 Feed per rev.		切削深度 Cutting depth	
			6630	6635	6640	9210	9230	9235	8030	8040		r_ε	f_{min}	f_{max}	$a_{p\,min}$	$a_{p\,max}$
	CNMM 120408E-OR	CNMM 432E-OR	●		●	●	●	●				0.8	0.25	0.60	2.0	8.0
	CNMM 120412E-OR	CNMM 433E-OR			○	●	●	●				1.2	0.30	0.70	2.5	8.0
	CNMM 120416E-OR	CNMM 434E-OR			○		●					1.6	0.35	0.80	2.5	8.0
	CNMM 160608E-OR	CNMM 542E-OR	○		●	●	●	●				0.8	0.30	0.60	3.0	8.0
	CNMM 160612E-OR	CNMM 543E-OR	○		○	●	●	●				1.2	0.35	0.90	3.0	10.0
	CNMM 160616E-OR	CNMM 544E-OR			○	●	●					1.6	0.36	1.00	3.0	10.0
	CNMM 190612E-OR	CNMM 643E-OR	●		●	●	●	●				1.2	0.35	0.90	3.0	10.0
	CNMM 190616E-OR	CNMM 644E-OR	●		○	●	●	●				1.6	0.37	1.20	3.0	10.0
	CNMM 190624E-OR	CNMM 646E-OR			○	●	●					2.4	0.38	1.25	3.0	12.0
	CNMM 250924E-OR	CNMM 866E-OR	●		○	●	●	●				2.4	0.45	1.70	4.0	16.0
	CNMM 190616E-OR1	CNMM 644E-OR1	●				●	●				1.6	0.30	1.00	3.0	11.0
	CNMM 250924S-923	CNMM 866S-923						●				2.4	0.45	1.50	3.0	13.0

● 标准库存产品 / Stock Assortiment　　○ 非标准库存产品 / Non-stock Assortiment　　所有尺寸 / All dimensions [mm]

DCGT

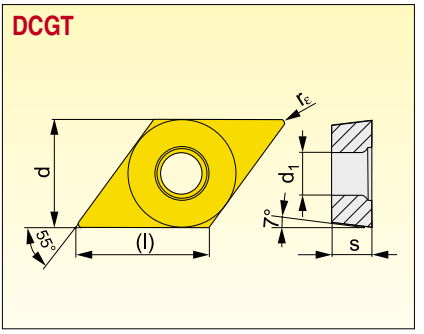

尺寸 Dimension	(l)	d	d_1	s	
0702	7.8	6.350	2.80	2.38	
11T3	11.6	9.525	4.40	3.97	

刀具 - 参见页码 / Tools - see page No.: 86, 87, 106-108

断屑槽 Chip breaker	ISO	ANSI	材质等级 / Grades									半径 Radius	每转进给量 Feed per rev.		切削深度 Cutting depth	
			8016	HF7								r_ε	f_{min}	f_{max}	$a_{p\,min}$	$a_{p\,max}$
	DCGT 070202F-AL	DCGT 2(1.5)(0.5)F-AL	●	●								0.2	0.06	0.12	0.3	2.1
	DCGT 070204F-AL	DCGT 2(1.5)1F-AL	●	●								0.4	0.10	0.24	0.4	2.1
	DCGT 11T302F-AL	DCGT 3(2.5)(0.5)F-AL	●	●								0.2	0.06	0.12	0.3	3.3
	DCGT 11T304F-AL	DCGT 3(2.5)1F-AL	●	●								0.4	0.10	0.24	0.4	3.3
	DCGT 11T308F-AL	DCGT 3(2.5)2F-AL	●	●								0.8	0.15	0.48	0.8	3.3

● 标准库存产品 / Stock Assortiment ○ 非标准库存产品 / Non-stock Assortiment

所有尺寸 / All dimensions [mm]

PRAMET

DCMT

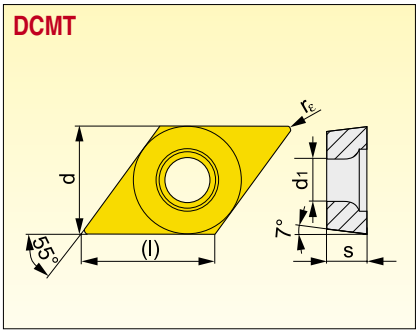

尺寸 Dimension	(l)	d	d_1	s	
0702	7.8	6.350	2.80	2.38	
11T3	11.6	9.525	4.40	3.97	

刀具 - 参见页码 / Tools - see page No.: 86, 87, 106-108

断屑槽 Chip breaker	ISO	ANSI	材质等级 / Grades									半径 Radius	每转进给量 Feed per rev.		切削深度 Cutting depth	
			6605	6615	6630	6640	9210	9230	9235	8016	8030	r_ε	f_{min}	f_{max}	$a_{p\,min}$	$a_{p\,max}$
	DCMT 070202E-UM	DCMT 2(1.5)(0.5)E-UM			●			●				0.2	0.08	0.12	0.5	2.1
	DCMT 070204E-UM	DCMT 2(1.5)1E-UM			●		●	●				0.4	0.08	0.24	0.5	2.1
	DCMT 11T304E-UM	DCMT 3(2.5)1E-UM			●		●	●				0.4	0.08	0.24	0.5	3.0
	DCMT 11T308E-UM	DCMT 3(2.5)2E-UM			●			●				0.8	0.08	0.25	0.8	3.0
	DCMT 070202E-UR	DCMT 2(1.5)(0.5)E-UR			●			●		●	●	0.2	0.05	0.12	0.2	1.0
	DCMT 070204E-UR	DCMT 2(1.5)1E-UR			●		●	●		●	●	0.4	0.08	0.24	0.4	2.0
	DCMT 11T302E-UR	DCMT 3(2.5)(0.5)E-UR			●			●			●	0.2	0.05	0.12	0.2	2.0
	DCMT 11T304E-UR	DCMT 3(2.5)1E-UR		●	●		●	●		●	●	0.4	0.05	0.15	0.4	2.0
	DCMT 11T308E-UR	DCMT 3(2.5)2E-UR		●	●		●	●		●	●	0.8	0.08	0.30	0.8	2.0
	DCMT 11T312E-UR	DCMT 3(2.5)3E-UR			●		●	●				1.2	0.15	0.30	1.2	2.0
	DCMT 11T304E-47	DCMT 3(2.5)1E-47	●	●	●	●	●	●	●	●		0.4	0.10	0.24	0.8	3.3
	DCMT 11T308E-47	DCMT 3(2.5)2E-47	●	●	●	○	●	●	●			0.8	0.10	0.40	0.8	3.3
	DCMT 11T312E-47	DCMT 3(2.5)3E-47						●				1.2	0.10	0.40	1.2	3.3

● 标准库存产品 / Stock Assortment ○ 非标准库存产品 / Non-stock Assortment

所有尺寸 / All dimensions [mm]

DCMW

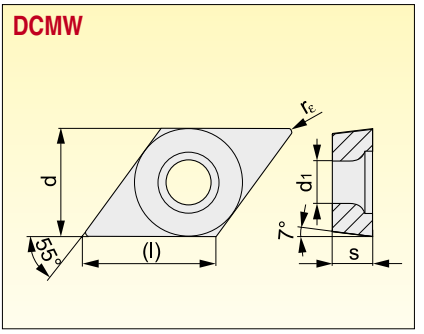

尺寸 Dimension	(l)	d	d_1	s	
0702	7.8	6.350	2.80	2.38	
11T3	11.6	9.525	4.40	3.97	

刀具 - 参见页码 / Tools - see page No.: 86, 87, 106-108

断屑槽 Chip breaker	ISO	ANSI	材质等级 / Grades									半径 Radius	每转进给量 Feed per rev.		切削深度 Cutting depth	
			6605									r_ε	f_{min}	f_{max}	$a_{p\,min}$	$a_{p\,max}$
	DCMW 070202	DCMW 2(1.5)(0.5)	○									0.2	0.05	0.09	0.2	2.0
	DCMW 070204	DCMW 2(1.5)1	●									0.4	0.05	0.20	0.4	2.0
	DCMW 11T304	DCMW 3(2.5)1	●									0.4	0.05	0.24	0.4	2.9
	DCMW 11T308	DCMW 3(2.5)2	●									0.8	0.05	0.35	0.8	2.9

DNMA

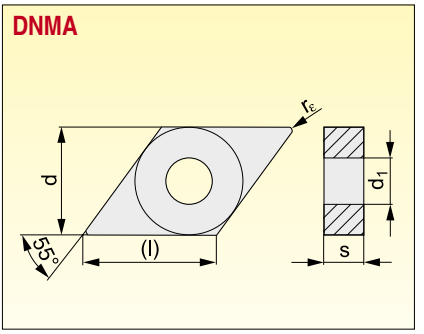

尺寸 Dimension	(l)	d	d_1	s	
1504	15.5	12.700	5.16	4.76	
1506	15.5	12.700	5.16	6.35	

刀具 - 参见页码 / Tools - see page No.: 18, 33-35, 50, 78

Chip breaker Quebra-cavaco	ISO	ANSI	材质等级 / Grades									半径 Radius	每转进给量 Feed per rev.		切削深度 Cutting depth	
			6605									r_ε	f_{min}	f_{max}	$a_{p\,min}$	$a_{p\,max}$
	DNMA 150404	DNMA 431	○									0.4	0.10	0.24	0.4	3.9
	DNMA 150408	DNMA 432	○									0.8	0.10	0.48	0.8	3.9
	DNMA 150604	DNMA 441	●									0.4	0.10	0.24	0.4	3.9
	DNMA 150608	DNMA 442	●									0.8	0.10	0.48	0.8	3.9
	DNMA 150612	DNMA 443	●									1.2	0.10	0.72	1.2	3.9

● 标准库存产品 / Stock Assortiment　　○ 非标准库存产品 / Non-stock Assortiment　　所有尺寸 / All dimensions [mm]

PRAMET

DNMG

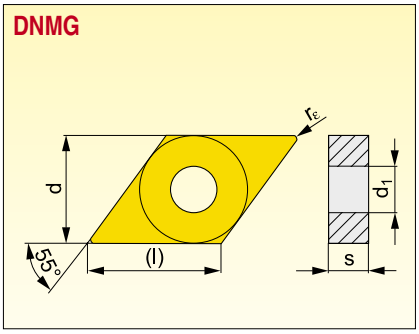

尺寸 Dimension	(l)	d	d_1	s	
1104	11.6	9.525	3.81	4.76	
1504	15.5	12.700	5.16	4.76	
1506	15.5	12.700	5.16	6.35	

刀具 - 参见页码 / Tools - see page No.: 18, 33-35, 50, 78

断屑槽 Chip breaker	ISO	ANSI	材质等级 / Grades									半径 Radius	每转进给量 Feed per rev.		切削深度 Cutting depth	
			6605	6615	6630	6640	9210	9230	9235	8016	8030	r_ε	f_{min}	f_{max}	$a_{p\,min}$	$a_{p\,max}$
	DNMG 150608E-DM	DNMG 442E-DM			○			●				0.8	0.15	0.48	1.0	4.5
	DNMG 110404E-F	DNMG 331E-F		●				●			●	0.4	0.08	0.24	0.5	3.0
	DNMG 110408E-F	DNMG 332E-F		●				●				0.8	0.15	0.35	0.8	3.0
	DNMG 150404E-F	DNMG 431E-F			○			●		●	●	0.4	0.08	0.24	0.5	3.0
	DNMG 150408E-F	DNMG 432E-F						●				0.8	0.08	0.35	0.8	3.0
	DNMG 150604E-F	DNMG 441E-F	○	●	●			●		●	●	0.4	0.08	0.24	0.5	3.0
	DNMG 150608E-F	DNMG 442E-F		●	○			●		●	●	0.8	0.08	0.35	0.8	3.0
	DNMG 110402E-FF	DNMG 33(0.5)E-FF								●		0.2	0.06	0.12	0.2	1.5
	DNMG 110404E-FF	DNMG 331E-FF								●		0.4	0.06	0.20	0.4	1.5
	DNMG 110408E-FF	DNMG 332E-FF								●		0.8	0.08	0.25	0.8	1.5
	DNMG 150404E-FF	DNMG 431E-FF								●		0.4	0.06	0.20	0.4	1.5
	DNMG 150604E-FF	DNMG 441E-FF								●		0.4	0.06	0.20	0.4	1.5
	DNMG 150608E-FF	DNMG 442E-FF								●		0.8	0.08	0.25	0.8	1.5
	DNMG 110404E-FM	DNMG 331E-FM					●	●			●	0.4	0.10	0.24	0.4	3.0
	DNMG 110408E-FM	DNMG 332E-FM					●	●			●	0.8	0.10	0.35	0.8	3.0
	DNMG 150404E-FM	DNMG 431E-FM					●	●			●	0.4	0.10	0.24	0.5	3.0
	DNMG 150408E-FM	DNMG 432E-FM					●	●			●	0.8	0.15	0.45	0.8	3.0
	DNMG 150604E-FM	DNMG 441E-FM					●	●			●	0.4	0.10	0.24	0.5	3.0
	DNMG 150608E-FM	DNMG 442E-FM					●	●			●	0.8	0.15	0.45	0.8	3.0
	DNMG 150612E-FM	DNMG 443E-FM					●	●			●	1.2	0.15	0.45	1.2	3.0

● 标准库存产品 / Stock Assortment ○ 非标准库存产品 / Non-stock Assortment

所有尺寸 / All dimensions [mm]

断屑槽 Chip breaker	ISO	ANSI	材质等级 / Grades									半径 Radius	每转进给量 Feed per rev.		切削深度 Cutting depth	
			6605	6615	6630	6640	9210	9230	9235	8016	8030	r_ε	f_{min}	f_{max}	$a_{p\,min}$	$a_{p\,max}$
	DNMG 110404E-M	DNMG 331E-M		●	○	●	●	●				0.4	0.12	0.24	0.5	3.0
	DNMG 110408E-M	DNMG 431E-M		●	○	●	●	●	●			0.8	0.15	0.48	0.8	3.0
	DNMG 110412E-M	DNMG 432E-M			○		●	●				1.2	0.17	0.72	1.2	3.3
	DNMG 150404E-M	DNMG 433E-M		○			●	●				0.4	0.12	0.24	0.5	3.0
	DNMG 150408E-M	DNMG 332E-M		●	●	●	●	●	●			0.8	0.15	0.48	0.8	4.5
	DNMG 150412E-M	DNMG 333E-M						●				1.2	0.17	0.72	1.2	4.5
	DNMG 150604E-M	DNMG 441E-M		●			●	●				0.4	0.12	0.24	0.5	3.0
	DNMG 150608E-M	DNMG 442E-M	○	●	●	●	●	●	●			0.8	0.15	0.48	0.8	4.5
	DNMG 150612E-M	DNMG 443E-M		●	●	●	●	●	●			1.2	0.17	0.72	1.2	4.5
	DNMG 110404E-NM	DNMG 331E-NM						●	●			0.4	0.15	0.24	0.5	3.0
	DNMG 110408E-NM	DNMG 332E-NM						●	●			0.8	0.20	0.40	0.8	3.0
	DNMG 150604E-NM	DNMG 441E-NM						●	●			0.4	0.15	0.24	0.5	3.0
	DNMG 150608E-NM	DNMG 442E-NM						●	●		●	0.8	0.20	0.40	0.8	3.0
	DNMG 150612E-NM	DNMG 443E-NM						●	●			1.2	0.20	0.40	1.2	3.5
	DNMG 150608E-R	DNMG 442E-R	●	●	●	●	●	●	●			0.8	0.25	0.48	2.0	4.5
	DNMG 150612E-R	DNMG 443E-R	●	●	●	○	●	●	●			1.2	0.25	0.70	2.0	4.5
	DNMG 150616E-R	DNMG 444E-R		●			●	●				1.6	0.30	0.80	2.0	4.5
	DNMG 110404ER-SI	DNMG 331ER-SI						●			○	0.4	0.20	0.24	0.8	3.3
	DNMG 110408ER-SI	DNMG 332ER-SI						●			○	0.8	0.20	0.48	0.8	3.3
	DNMG 150408ER-SI	DNMG 432ER-SI						●			○	0.8	0.20	0.48	0.8	4.5
	DNMG 150604ER-SI	DNMG 441ER-SI			●			●			●	0.4	0.20	0.24	0.8	4.5
	DNMG 150608ER-SI	DNMG 442ER-SI			●			●			●	0.8	0.20	0.48	0.8	4.5
	DNMG 110404EL-SI	DNMG 331EL-SI						●			○	0.4	0.20	0.24	0.8	3.3
	DNMG 110408EL-SI	DNMG 332EL-SI						●			○	0.8	0.20	0.48	0.8	3.3
	DNMG 150408EL-SI	DNMG 432EL-SI						●			○	0.8	0.20	0.48	0.8	4.5
	DNMG 150604EL-SI	DNMG 441EL-SI			●			●			●	0.4	0.20	0.24	0.8	4.5
	DNMG 150608EL-SI	DNMG 442EL-SI			●			●			●	0.8	0.20	0.48	0.8	4.5

● 标准库存产品 / Stock Assortment ○ 非标准库存产品 / Non-stock Assortment

所有尺寸 / All dimensions [mm]

PRAMET

DNMM

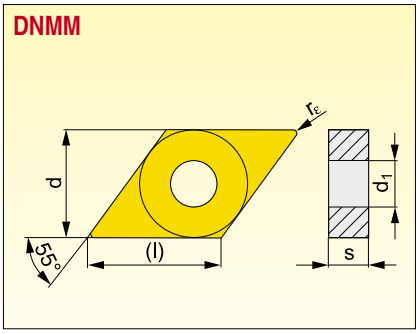

尺寸 Dimension	(l)	d	d_1	s	
1504	15.5	12.700	5.16	4.76	
1506	15.5	12.700	5.16	6.35	

刀具 - 参见页码 / Tools - see page No.: 18, 33-35, 50, 78

断屑槽 Chip breaker	ISO	ANSI	材质等级 / Grades										半径 Radius	每转进给量 Feed per rev.		切削深度 Cutting depth	
			6630	6640	9210	9230	9235	8030					r_ε	f_{min}	f_{max}	$a_{p\,min}$	$a_{p\,max}$
	DNMM 150608E-DR	DNMM 442E-DR	○			●							0.8	0.30	0.48	2.5	4.5
	DNMM 150408E-NR	DNMM 432E-NR				●							0.8	0.25	0.48	1.0	4.5
	DNMM 150608E-NR	DNMM 442E-NR	○			●		○					0.8	0.25	0.48	1.0	4.5
	DNMM 150608E-NR2	DNMM 442E-NR2				●	●						0.8	0.28	0.48	0.8	4.5
	DNMM 150608E-OR	DNMM 442E-OR		○		●							0.8	0.25	0.48	2.0	4.5
	DNMM 150612E-OR	DNMM 443E-OR	○	○	●	●	●						1.2	0.30	0.70	2.0	4.5
	DNMM 150616E-OR	DNMM 444E-OR		○		●							1.6	0.35	0.80	2.0	4.5

● 标准库存产品 / Stock Assortiment ○ 非标准库存产品 / Non-stock Assortiment

所有尺寸 / All dimensions [mm]

KNUX

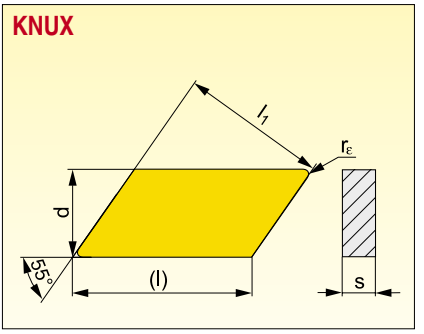

尺寸 Dimension	(l)	l_1	d	s	
1604	16.0	16.15	9.525	4.76	
1904	19.4	15.88	9.525	4.76	

刀具 - 参见页码 / Tools - see page No.: 7

断屑槽 Chip breaker	ISO	ANSI	材质等级 / Grades									半径 Radius	每转进给量 Feed per rev.		切削深度 Cutting depth	
			6620	6630	6640	9230						r_ε	f_{min}	f_{max}	$a_{p\,min}$	$a_{p\,max}$
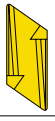	**KNUX 160405ER-72**	KNUX -3xER-72		●		●						0.5	0.15	0.23	0.5	4.0
	KNUX 160405EL-72	KNUX -3xEL-72		●		●						0.5	0.15	0.23	0.5	4.0
	KNUX 160405SR-73	KNUX -3xSR-73	○		●							0.5	0.20	0.30	0.5	4.8
	KNUX 160410SR-73	KNUX -3xSR-73	○		●							1.0	0.20	0.60	1.0	4.8
	KNUX 160405SL-73	KNUX -3xSL-73	○		●							0.5	0.20	0.30	0.5	4.8
	KNUX 160410SL-73	KNUX -3xSL-73	○		●							1.0	0.20	0.60	1.0	4.8
	KNUX 160415SR-74	KNUX -3xSR-74			●							1.5	0.30	0.70	1.5	4.8
	KNUX 160415SL-74	KNUX -3xSL-74			●							1.5	0.30	0.70	1.5	4.8
	KNUX 190405SR-78	KNUX -3xSR-78			●							0.5	0.20	0.30	0.5	5.7
	KNUX 190410SR-78	KNUX -3xSR-78			●							1.0	0.20	0.60	1.0	5.7
	KNUX 190405SL-78	KNUX -3xSL-78			●							0.5	0.20	0.30	0.5	5.7
	KNUX 190410SL-78	KNUX -3xSL-78			●							1.0	0.20	0.60	1.0	5.7

● 标准库存产品 / Stock Assortiment ○ 非标准库存产品 / Non-stock Assortiment

所有尺寸 / All dimensions [mm]

PRAMET

LNUX

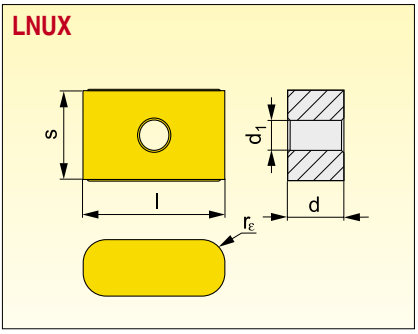

尺寸 Dimension	l	d	d_1	s	
1919	19.05	10.00	6.35	19.05	
3019	30.00	12.00	6.35	19.05	

断屑槽 Chip breaker	ISO	ANSI	材质等级 / Grades										半径 Radius	每转进给量 Feed per rev.		切削深度 Cutting depth	
			6605	6615	6630	9230							r_ε	f_{min}	f_{max}	$a_{p\,min}$	$a_{p\,max}$
	LNUX 191940SN-DF	LNUX --10SN-DF		●		●							4.0	0.70	1.50	2.0	6.0
	LNUX 191940SN-DM	LNUX --10SN-DM				●							4.0	0.70	1.50	2.0	6.0
	LNUX 301940SN-DM	LNUX --10SN-DM	○	●	●	●							4.0	0.80	1.50	3.0	10.0

● 标准库存产品 / Stock Assortment　　○ 非标准库存产品 / Non-stock Assortment　　所有尺寸 / All dimensions [mm]

LNUX 40. 50; LNMX

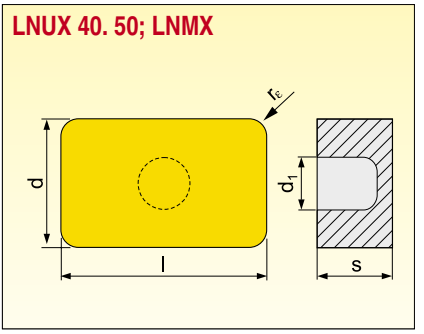

尺寸 Dimension	l	b	d_1	s	
40-1	40.00	25.20	9.30	14.00	
50-1	50.80	25.40	9.30	14.00	
5014	50.80	25.40	6.35	14.00	

刀具 - 参见页码 / Tools - see page No.: 36, 58, 67-68

断屑槽 Chip breaker	ISO	ANSI	材质等级 / Grades										半径 Radius	每转进给量 Feed per rev.		切削深度 Cutting depth	
			6605	6630	6635	6640	9230	9235					r_ε	f_{min}	f_{max}	$a_{p\,min}$	$a_{p\,max}$
	LNUX 40-1129002		○	○	○	○	●						3.2	1.30	2.60	10.0	27.0
	LNUX 40-1129003			●	●	●	●	●					3.2	1.20	2.50	10.0	27.0
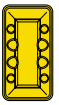	**LNUX 50-1275000**			●			●						3.2	1.20	2.50	10.0	36.0
	LNMX 501432E					○		●					3.2	1.20	2.50	10.0	36.0

● 标准库存产品 / Stock Assortment　　○ 非标准库存产品 / Non-stock Assortment　　所有尺寸 / All dimensions [mm]

PRAMET

RCGT

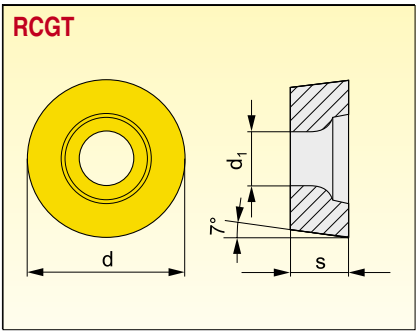

尺寸 Dimension	d	d_1	s		
0803	8.000	3.40	3.18		
1003	10.000	4.40	3.18		

刀具 - 参见页码 / Tools - see page No.: 88, 89, 115

断屑槽 Chip breaker	ISO	ANSI	材质等级 / Grades									半径 Radius	每转进给量 Feed per rev.		切削深度 Cutting depth	
			8016	HF7								r_ε	f_{min}	f_{max}	$a_{p\,min}$	$a_{p\,max}$
	RCGT 0803MOF-AL	RCGT -2F-AL	○	●									0.20	1.50	0.8	3.0
	RCGT 1003MOF-AL	RCGT -2F-AL	●	●									0.20	2.00	1.0	4.0

● 标准库存产品 / Stock Assortment ○ 非标准库存产品 / Non-stock Assortment

所有尺寸 / All dimensions [mm]

RCMT

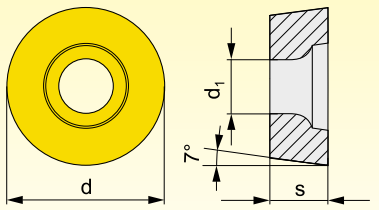

尺寸 Dimension	d	d_1	s		
0602	6.000	2.80	2.38		
0803	8.000	3.40	3.18		
10T3	10.000	4.40	3.97		
1204	12.000	4.40	4.76		
1606	16.000	5.50	6.35		
2006	20.000	6.50	6.35		
2507	25.000	8.60	7.94		

刀具 - 参见页码 / Tools - see page No.: 88, 89, 115

断屑槽 Chip breaker	ISO	ANSI	材质等级 / Grades									半径 Radius	每转进给量 Feed per rev.		切削深度 Cutting depth	
			6630	6640	9210	9230	9235	8030				r_ε	f_{min}	f_{max}	$a_{p\,min}$	$a_{p\,max}$
	RCMT 0602MOE-UR	RCMT -(1.5)E-UR	●			●		●					0.10	0.40	0.1	1.5
	RCMT 0803MOE-UR	RCMT -2E-UR	●		●	●		●					0.13	0.50	0.2	3.0
	RCMT 10T3MOE-UR	RCMT -(2.5)E-UR	●		●	●		●					0.15	0.60	0.2	4.0
	RCMT 1204MOE-UR	RCMT -3E-UR	●			●		●					0.17	1.00	0.2	5.0
	RCMT 1606MOS-37	RCMT -4S-37	●		●	●							0.20	0.90	1.0	4.0
	RCMT 2006MOS-371	RCMT -4S-371		○		●	●						0.20	1.20	1.0	5.0
	RCMT 2507MOS-372	RCMT -5S-372				●							0.20	1.20	1.0	6.0

● 标准库存产品 / Stock Assortiment ○ 非标准库存产品 / Non-stock Assortiment

所有尺寸 / All dimensions [mm]

PRAMET

RCMW

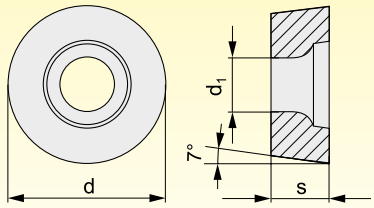

尺寸 Dimension	d	d_1	s		
0602	6.000	2.80	2.38		
0803	8.000	3.40	3.18		
10T3	10.000	4.40	3.97		
1204	12.000	4.40	4.76		

刀具 - 参见页码 / Tools - see page No.: 88, 89, 115

断屑槽 Chip breaker	ISO	ANSI	材质等级 / Grades									半径 Radius	每转进给量 Feed per rev.		切削深度 Cutting depth	
			6605									r_ε	f_{min}	f_{max}	$a_{p\,min}$	$a_{p\,max}$
	RCMW 0602MO	RCMW -(1.5)	●										0.05	0.20	0.5	1.5
	RCMW 0803MO	RCMW -2	○										0.05	0.30	0.5	2.0
	RCMW 10T3MO	RCMW -(2.5)	●										0.10	0.35	0.5	2.5
	RCMW 1204MO	RCMW -3	○										0.05	0.40	0.5	3.0

● 标准库存产品 / Stock Assortment ○ 非标准库存产品 / Non-stock Assortment

所有尺寸 / All dimensions [mm]

RCMX

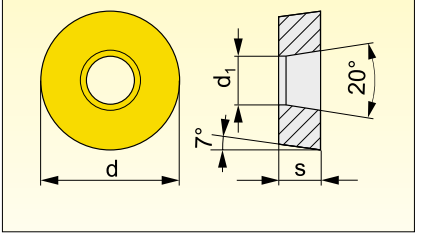

尺寸 Dimension	d	d_1	s		
1003	10.000	3.60	3.18		
1204	12.000	4.20	4.76		
1606	16.000	5.20	6.35		
2006	20.000	6.50	6.35		
2507	25.000	7.20	7.94		
3209	32.000	9.50	9.52		

刀具 - 参见页码 / Tools - see page No.: 37, 38, 59

断屑槽 Chip breaker	ISO	ANSI	材质等级 / Grades										半径 Radius	每转进给量 Feed per rev.		切削深度 Cutting depth	
			6605	6630	6640	9210	9230	9235					r_ε	f_{min}	f_{max}	$a_{p\,min}$	$a_{p\,max}$
	RCMX 1003MOS-31	RCMX -2S-31			●			●						0.40	1.00	1.5	2.5
	RCMX 1204MOS-321	RCMX -3S-321			●		●	●						0.40	1.00	1.0	3.0
	RCMX 1606MOS-331	RCMX -4S-331		●	●		●	●						0.40	1.20	1.0	4.0
	RCMX 1606MOS-37	RCMX -4S-37		○		●	●							0.20	0.90	1.0	4.0
	RCMX 2006MOS-341	RCMX -4S-341	●	●	●	●	●	●						0.60	1.20	2.0	5.0
	RCMX 2006MOS-37	RCMX -4S-37		●	○		●	●						0.20	0.90	1.5	5.0
	RCMX 2507MOS-351	RCMX -5S-351		●	●		●	●						0.80	1.20	3.0	7.0
	RCMX 2507MOS-352	RCMX -5S-352		●		●	●							0.80	1.50	3.0	7.0
	RCMX 2507MOS-37	RCMX -5S-37		●			●	●						0.60	0.90	2.0	7.0
	RCMX 3209MOS-361	RCMX -6S-361		●	●	●	●	●						0.80	1.50	3.0	8.0

● 标准库存产品 / Stock Assortment ○ 非标准库存产品 / Non-stock Assortment

所有尺寸 / All dimensions [mm]

RCUM

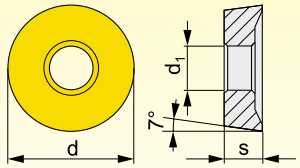

尺寸 Dimension	d	d_1	s		
3010	30.000	10.00	9.60		

断屑槽 Chip breaker	ISO	ANSI	材质等级 / Grades									半径 Radius	每转进给量 Feed per rev.		切削深度 Cutting depth	
			6615	S30								r_ε	f_{min}	f_{max}	$a_{p\,min}$	$a_{p\,max}$
	RCUM 3010MOSN	RCUM ---MOSN	●	●									0.90	1.60	2.0	8.0

● 标准库存产品 / Stock Assortiment　　○ 非标准库存产品 / Non-stock Assortiment　　所有尺寸 / All dimensions [mm]

RNMG

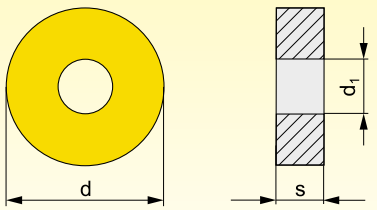

尺寸 Dimension	d	d_1	s		
1204	12.700	5.16	4.76		
1506	15.875	6.35	6.35		
1906	19.050	6.35	6.35		
2509	25.400	9.12	9.52		

刀具 - 参见页码 / Tools - see page No.: 39

断屑槽 Chip breaker	ISO	ANSI	材质等级 / Grades									半径 Radius	每转进给量 Feed per rev.		切削深度 Cutting depth	
			6605	6630	9210	9230						r_ε	f_{min}	f_{max}	$a_{p\,min}$	$a_{p\,max}$
	RNMG 120400E-08	RNMG 43E-08	●	●	●	●							0.30	0.80	1.0	6.0
	RNMG 150600E-08	RNMG 54E-08	○	●		●							0.30	0.80	1.0	6.0
	RNMG 190600E-08	RNMG 64E-08		○	●	●							0.30	0.80	1.0	6.0
	RNMG 250900E-081	RNMG 86E-081		○	●	●							0.80	1.20	3.0	7.0

● 标准库存产品 / Stock Assortiment ○ 非标准库存产品 / Non-stock Assortiment

所有尺寸 / All dimensions [mm]

PRAMET

SCGT

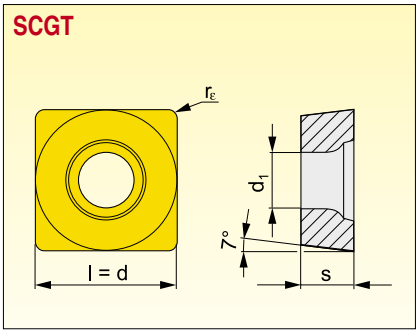

尺寸 Dimension	l	d	d_1	s	
1204	12.700	12.700	5.50	4.76	

刀具 - 参见页码 / Tools - see page No.: 90-92, 109

断屑槽 Chip breaker	ISO	ANSI	材质等级 / Grades									半径 Radius	每转进给量 Feed per rev.		切削深度 Cutting depth	
			8016	HF7								r_ε	f_{min}	f_{max}	$a_{p\,min}$	$a_{p\,max}$
	SCGT 120408F-AL	SCGT 432F-AL	●	●								0.8	0.15	0.60	0.8	7.0

● 标准库存产品 / Stock Assortment　　○ 非标准库存产品 / Non-stock Assortment　　所有尺寸 / All dimensions [mm]

SCMT

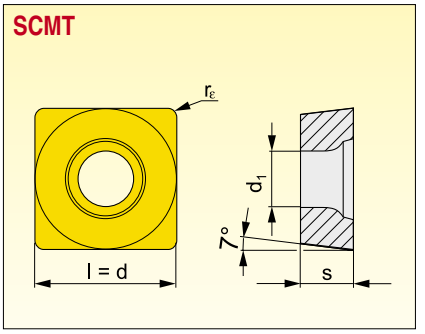

尺寸 Dimension	l	d	d_1	s	
09T3	9.525	9.525	4.40	3.97	
1204	12.700	12.700	5.50	4.76	
2509	25.400	25.400	8.70	9.52	
3809	38.100	38.100	8.70	9.52	

刀具 - 参见页码 / Tools - see page No.: 63, 71-72, 90-92, 109, 115

断屑槽 Chip breaker	ISO	ANSI	材质等级 / Grades										半径 Radius	每转进给量 Feed per rev.		切削深度 Cutting depth	
			6605	6615	6630	6635	6640	9210	9230	9235	8016	8030	r_ε	f_{min}	f_{max}	$a_{p\,min}$	$a_{p\,max}$
	SCMT 09T304E-UM	SCMT 3(2.5)1E-UM							●		●	●	0.4	0.08	0.25	0.5	3.0
	SCMT 120404E-UM	SCMT 431E-UM							●		○	●	0.4	0.08	0.25	0.5	3.0
	SCMT 09T304E-UR	SCMT 3(2.5)1E-UR		○	●			●	●			●	0.4	0.08	0.30	0.4	3.0
	SCMT 09T308E-UR	SCMT 3(2.5)2E-UR		●	●			●	●			●	0.8	0.08	0.50	0.8	3.0
	SCMT 120408E-UR	SCMT 432E-UR		●	●			●	●			●	0.8	0.08	0.50	0.8	4.0
	SCMT 120412E-UR	SCMT 433E-UR		○	○			●	●			●	1.2	0.08	0.50	1.2	4.0
	SCMT 09T304E-47	SCMT 3(2.5)1E-47		○	●		○	●	●	●			0.4	0.10	0.34	0.8	4.0
	SCMT 09T308E-47	SCMT 3(2.5)2E-47		○	●		○	●	●	●			0.8	0.10	0.40	0.8	4.0
	SCMT 120408E-48	SCMT 432E-48		○	●			●	●				0.8	0.20	0.68	1.0	8.0
	SCMT 120412E-48	SCMT 433E-48	○	○	○			●	●				1.2	0.20	0.70	1.2	8.0
	SCMT 250924E-OR	SCMT 866E-OR			○	○	○		●	●			2.4	0.60	1.80	3.0	16.0
	SCMT 380932E-OR	SCMT -68E-OR			●	●	●		●	●			3.2	1.00	2.00	4.0	24.0
	SCMT 250924E-SR	SCMT 866E-SR			○	○	○		●	●			2.4	0.60	1.80	3.0	16.0
	SCMT 380932E-SR	SCMT -68E-SR				●							3.2	1.20	2.00	4.0	24.0
	SCMT 380932E-DR4	SCMT -68E-DR4								●			3.2	0.70	1.40	4.0	18.0

● 标准库存产品 / Stock Assortiment　　○ 非标准库存产品 / Non-stock Assortiment　　所有尺寸 / All dimensions [mm]

PRAMET

SCMW

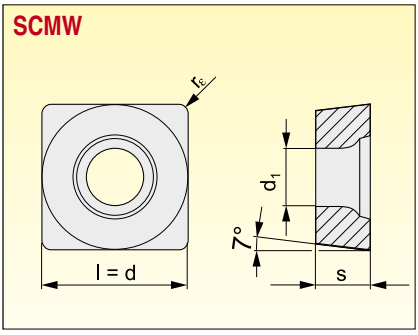

尺寸 Dimension	l	d	d_1	s	
09T3	9.525	9.525	4.40	3.97	
1204	12.700	12.700	5.50	4.76	

刀具 - 参见页码 / Tools - see page No.: 90-92, 109, 115

断屑槽 Chip breaker	ISO	ANSI	材质等级 / Grades									半径 Radius	每转进给量 Feed per rev.		切削深度 Cutting depth	
			6605									r_ε	f_{min}	f_{max}	$a_{p\,min}$	$a_{p\,max}$
	SCMW 09T304	SCMW 3(2.5)1	●									0.4	0.05	0.34	0.4	4.5
	SCMW 09T308	SCMW 3(2.5)2	●									0.8	0.05	0.35	0.8	4.5
	SCMW 120408	SCMW 432	●									0.8	0.05	0.40	0.8	6.0

SNMA

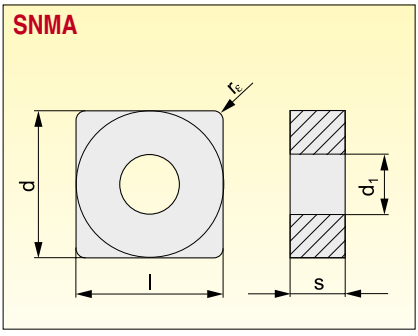

尺寸 Dimension	l	d	d_1	s	
1204	12.700	12.700	5.16	4.76	
1506	15.875	15.875	6.35	6.35	
1906	19.050	19.050	7.94	6.35	
2507	25.400	25.400	9.12	7.94	
2509	25.400	25.400	9.12	9.52	

刀具 - 参见页码 / Tools - see page No.: 19, 40-43, 51, 60, 61, 69, 70

断屑槽 Chip breaker	ISO	ANSI	Grades / Classes									Radius Raio	Feed per rev. Avanço por rot.		Cutting depth Prof. de corte	
			6605	6615								r_ε	f_{min}	f_{max}	$a_{p\,min}$	$a_{p\,max}$
	SNMA 120408	SNMA 432	●	●								0.8	0.10	0.60	0.8	6.0
	SNMA 120412	SNMA 433	●	●								1.2	0.10	0.60	1.2	6.0
	SNMA 150612	SNMA 543	●									1.2	0.10	0.90	1.2	7.1
	SNMA 190612	SNMA 643	○									1.2	0.10	0.90	1.2	8.9
	SNMA 190616	SNMA 644	●									1.6	0.10	0.90	1.6	8.9
	SNMA 250724	SNMA 856	●									2.4	0.10	1.10	2.4	12.0
	SNMA 250924	SNMA 866	●	○								2.4	0.10	1.10	2.4	12.0

● 标准库存产品 / Stock Assortment ○ 非标准库存产品 / Non-stock Assortment 所有尺寸 / All dimensions [mm]

SNMG

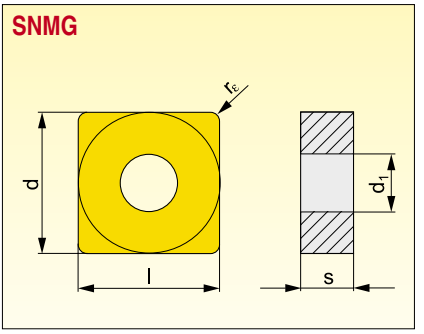

尺寸 Dimension	l	d	d_1	s	
1204	12.700	12.700	5.16	4.76	
1506	15.875	15.875	6.35	6.35	
1906	19.050	19.050	7.94	6.35	

刀具 - 参见页码 / Tools - see page No.: 19, 40-43, 51, 61

断屑槽 Chip breaker	ISO	ANSI	材质等级 / Grades									半径 Radius	每转进给量 Feed per rev.		切削深度 Cutting depth	
			6605	6615	6630	6640	9210	9230	9235	8030		r_ε	f_{min}	f_{max}	$a_{p\,min}$	$a_{p\,max}$
	SNMG 150608E-DM	SNMG 542E-DM						●				0.8	0.15	0.68	1.0	7.0
	SNMG 120404E-F	SNMG 431E-F		○	○			●		○		0.4	0.08	0.34	0.5	3.0
	SNMG 120408E-F	SNMG 432E-F		○	○			●		○		0.8	0.08	0.35	0.8	3.0
	SNMG 120404E-FM	SNMG 431E-FM					●	●		●		0.4	0.10	0.30	0.5	3.0
	SNMG 120408E-FM	SNMG 432E-FM					●	●		●		0.8	0.15	0.45	0.8	3.0
	SNMG 120412E-FM	SNMG 433E-FM					●	●		●		1.2	0.15	0.45	1.2	3.0
	SNMG 120416E-FM	SNMG 434E-FM					●	●		●		1.6	0.15	0.45	1.6	3.0
	SNMG 120408E-M	SNMG 432E-M	●	●	●	●	●	●	●			0.8	0.15	0.60	0.8	6.0
	SNMG 120412E-M	SNMG 433E-M		○	○	●	●	●	●			1.2	0.15	0.60	1.2	6.0
	SNMG 120416E-M	SNMG 434E-M					●	●				1.6	0.17	0.80	1.6	6.0
	SNMG 150612E-M	SNMG 543E-M			●	●	●	●				1.2	0.17	0.80	1.2	8.0
	SNMG 190612E-M	SNMG 643E-M		○	●	●	●	●				1.2	0.17	0.80	1.2	8.0
	SNMG 190616E-M	SNMG 644E-M		○	○		●	●				1.6	0.17	0.80	1.6	8.0
	SNMG 120408E-R	SNMG 432E-R	●	●	●	●	●	●	●			0.8	0.25	0.60	2.0	6.0
	SNMG 120412E-R	SNMG 433E-R	○	●	●	●	●	●	●			1.2	0.25	0.70	2.0	6.0
	SNMG 120416E-R	SNMG 434E-R	○	○			●	●				1.6	0.30	0.80	2.0	6.0
	SNMG 150612E-R	SNMG 543E-R	●	●		●	●	●	●			1.2	0.25	0.70	2.0	7.0
	SNMG 150616E-R	SNMG 544E-R	○	○	●	○	●	●	●			1.6	0.25	0.70	2.0	7.0
	SNMG 190612E-R	SNMG 643E-R	○	●	●	●	●	●	●			1.2	0.25	0.70	2.0	9.0
	SNMG 190616E-R	SNMG 644E-R	●	●	●	●	●	●	●			1.6	0.30	0.80	2.0	9.0
	SNMG 120408E-NM	SNMG 432E-NM						●	●			0.8	0.20	0.50	0.8	3.0
	SNMG 120412E-NM	SNMG 433E-NM						●	●			1.2	0.20	0.50	1.2	3.5

● 标准库存产品 / Stock Assortment ○ 非标准库存产品 / Non-stock Assortment

所有尺寸 / All dimensions [mm]

PRAMET

SNMM

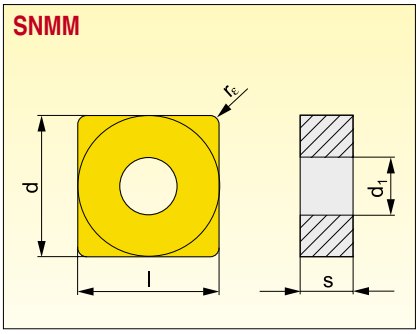

尺寸 Dimension	l	d	d_1	s	
1204	12.700	12.700	5.16	4.76	
1506	15.875	15.875	6.35	6.35	
1906	19.050	19.050	7.94	6.35	
2507	25.400	25.400	9.12	7.94	
2509	25.400	25.400	9.12	9.52	

刀具 - 参见页码 / Tools - see page No.: 19. 40-43. 51, 60, 61, 69, 70

断屑槽 Chip breaker	ISO	ANSI	材质等级 / Grades									半径 Radius	每转进给量 Feed per rev.		切削深度 Cutting depth	
			6630	6635	6640	9210	9230	9235	8030	8040		r_ε	f_{min}	f_{max}	$a_{p\,min}$	$a_{p\,max}$
	SNMM 120412E-DR	SNMM 433E-DR	●		●		●	●				1.2	0.30	0.85	2.5	8.4
	SNMM 150612E-DR	SNMM 543E-DR			○		●	●				1.2	0.30	0.85	2.5	9.0
	SNMM 190612E-DR	SNMM 643E-DR	●		●		●	●				1.2	0.30	0.85	2.5	9.0
	SNMM 190616E-DR	SNMM 644E-DR	○		○		●	●				1.6	0.30	0.85	2.5	9.0
	SNMM 190616E-HR	SNMM 644E-HR	●		●		●	●		●		1.6	0.50	1.36	5.0	13.3
	SNMM 190624E-HR	SNMM 646E-HR	○		○		●	●		○		2.4	0.50	1.40	5.0	13.3
	SNMM 250716E-HR	SNMM 854E-HR			○		●	●		●		1.6	0.50	1.36	5.0	14.0
	SNMM 250724E-HR	SNMM 856E-HR	○		●		●	●		●		2.4	0.50	1.40	5.0	14.0
	SNMM 250732E-HR	SNMM 858E-HR	○				●					3.2	0.50	1.40	5.0	14.0
	SNMM 250924E-HR	SNMM 866E-HR	●		○		●	●		○		2.4	0.50	1.40	5.0	14.0
	SNMM 250932E-HR	SNMM 868E-HR					●	●				3.2	0.50	1.40	5.0	14.0
	SNMM 120408E-NR	SNMM 432E-NR	●		●		●	●	●			0.8	0.25	0.68	1.0	8.4
	SNMM 120408E-NR2	SNMM 432E-NR2					●	●				0.8	0.30	0.55	0.8	7.0
	SNMM 120412E-NR2	SNMM 433E-NR2					●	●				1.2	0.32	0.70	1.2	7.5
	SNMM 150612E-NR2	SNMM 543E-NR2		○			●	●				1.2	0.30	0.70	1.2	9.0
	SNMM 150616E-NR2	SNMM 544E-NR2						●				1.6	0.35	0.90	1.6	9.0
	SNMM 190612E-NR2	SNMM 643E-NR2					●	●				1.2	0.32	0.70	1.5	12.0
	SNMM 190616E-NR2	SNMM 644E-NR2	○				●	●				1.6	0.35	0.90	1.6	12.0
	SNMM 190624E-NR2	SNMM 646E-NR2					●	●				2.4	0.40	1.20	2.5	12.0
	SNMM 250724E-NR2	SNMM 856E-NR2	○				●	●				2.4	0.50	1.40	3.0	16.0
	SNMM 250924E-NR2	SNMM 866E-NR2		●			●			●		2.4	0.50	1.60	3.0	16.0

● 标准库存产品 / Stock Assortment ○ 非标准库存产品 / Non-stock Assortment

所有尺寸 / All dimensions [mm]

断屑槽 Chip breaker	ISO	ANSI	材质等级 / Grades									半径 Radius	每转进给量 Feed per rev.		切削深度 Cutting depth	
			6630	6635	6640	9210	9230	9235	8030	8040		r_ε	f_{min}	f_{max}	$a_{p\,min}$	$a_{p\,max}$
	SNMM 120408E-OR	SNMM 432E-OR			○	●	●	●				0.8	0.30	0.68	1.5	6.0
	SNMM 120412E-OR	SNMM 433E-OR			○		●	●				1.2	0.32	0.70	2.0	6.0
	SNMM 120416E-OR	SNMM 434E-OR					●					1.6	0.35	0.80	2.0	8.0
	SNMM 150608E-OR	SNMM 542E-OR			○		●					0.8	0.35	0.60	2.0	8.0
	SNMM 150612E-OR	SNMM 543E-OR			○	●	●	●				1.2	0.35	1.00	2.0	9.0
	SNMM 150616E-OR	SNMM 544E-OR			○	●	●					1.6	0.35	1.00	2.0	9.0
	SNMM 190612E-OR	SNMM 643E-OR	○		○	●	●	●				1.2	0.35	1.00	3.0	10.0
	SNMM 190616E-OR	SNMM 644E-OR	●		●	●	●	●				1.6	0.38	1.20	2.0	10.0
	SNMM 190624E-OR	SNMM 646E-OR	○		○	●	●					2.4	0.45	1.20	3.5	12.0
	SNMM 250716E-OR	SNMM 854E-OR	○		○	●	●	●				1.6	0.45	1.36	4.0	16.0
	SNMM 250724E-OR	SNMM 856E-OR	●		○	●	●	●				2.4	0.45	1.70	4.0	16.0
	SNMM 250924E-OR	SNMM 866E-OR	○		○	●	●	●				2.4	0.30	1.70	3.0	16.0
	SNMM 190616E-OR1	SNMM 644E-OR1	●				●	●				1.6	0.37	1.20	3.0	10.0
	SNMM 250724S-SR	SNMM 856S-SR	○		●		●					2.4	0.70	1.60	5.0	16.0
	SNMM 250924S-SR	SNMM 866S-SR	●		●		●	●				2.4	0.70	1.60	5.0	16.0
	SNMM 190616S-923	SNMM 644S-923						●				1.6	0.45	1.36	3.0	13.0
	SNMM 250724S-923	SNMM 856S-923						●				2.4	0.45	1.50	3.0	13.0
	SNMM 250924S-923	SNMM 866S-923						●				2.4	0.45	1.50	3.0	13.0

● 标准库存产品 / Stock Assortment　　○ 非标准库存产品 / Non-stock Assortment

所有尺寸 / All dimensions [mm]

PRAMET

SNMX

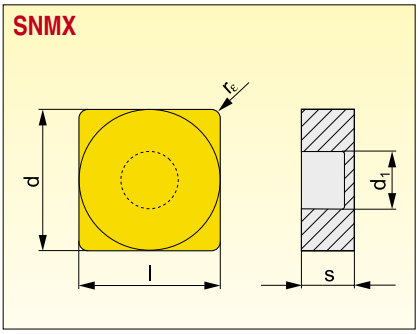

尺寸 Dimension	l	d	d_1	s	
2512	25.400	25.400	9.17	12.00	

刀具 - 参见页码 / Tools - see page No.: 40, 42, 43, 60, 69, 70

断屑槽 Chip breaker	ISO	ANSI	材质等级 / Grades										半径 Radius	每转进给量 Feed per rev.		切削深度 Cutting depth	
			6630	6635	6640	9230	9235	8040					r_ε	f_{min}	f_{max}	$a_{p\,min}$	$a_{p\,max}$
	SNMX 251224S-SR	SNMX 886S-SR	●	○	○	●	●	●					2.4	0.70	1.60	5.0	16.0

SPMR

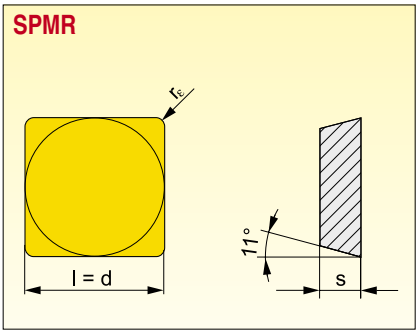

尺寸 Dimension	l	d	s		
0903	9.525	9.525	3.18		
1203	12.700	12.700	3.18		

刀具 - 参见页码 / Tools - see page No.: 8, 13

断屑槽 Chip breaker	ISO	ANSI	材质等级 / Grades										半径 Radius	每转进给量 Feed per rev.		切削深度 Cutting depth	
			6630	6640	9230	9235							r_ε	f_{min}	f_{max}	$a_{p\,min}$	$a_{p\,max}$
	SPMR 090304E-46	SPMR 321E-46			●								0.4	0.10	0.34	1.0	3.0
	SPMR 090308E-46	SPMR 322E-46			●								0.8	0.10	0.40	1.0	3.0
	SPMR 120304E-48	SPMR 421E-48	●	○	●	●							0.4	0.20	0.34	1.0	8.0
	SPMR 120308E-48	SPMR 422E-48	●	●	●	●							0.8	0.20	0.68	1.0	8.0
	SPMR 120312E-48	SPMR 423E-48			●	●							1.2	0.20	0.70	1.2	8.0

● 标准库存产品 / Stock Assortment　　○ 非标准库存产品 / Non-stock Assortment　　所有尺寸 / All dimensions [mm]

SPUN

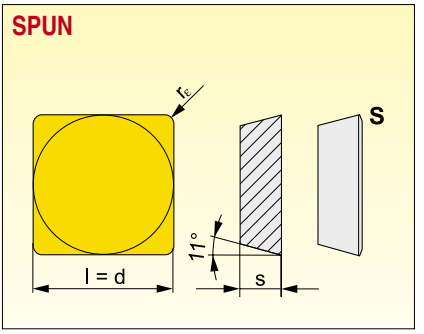

尺寸 Dimension	l	d	s		
1203	12.700	12.700	3.18		
1504	15.875	15.875	4.76		
1904	19.050	19.050	4.76		
2506	25.400	25.400	6.35		

刀具 - 参见页码 / Tools - see page No.: 8, 13

断屑槽 Chip breaker	ISO	ANSI	材质等级 / Grades									半径 Radius	每转进给量 Feed per rev.		切削深度 Cutting depth	
			6640	8016								r_ε	f_{min}	f_{max}	$a_{p\,min}$	$a_{p\,max}$
	SPUN 120308	SPUN 422	●	●								0.8	0.10	0.30	0.8	6.0
	SPUN 120312	SPUN 423	●									1.2	0.10	0.30	1.2	6.0
	SPUN 150408	SPUN 532	●									0.8	0.10	0.40	0.8	7.1
	SPUN 150412	SPUN 533	●	○								1.2	0.10	0.40	1.2	7.1
	SPUN 190408	SPUN 632	●									0.8	0.10	0.40	0.8	8.9
	SPUN 190412	SPUN 633	●									1.2	0.10	0.40	1.2	8.9
	SPUN 190416	SPUN 634	●									1.6	0.10	0.40	1.6	8.9
	SPUN 250620S	SPUN 845S	●									2.0	0.40	0.60	2.0	17.5

● 标准库存产品 / Stock Assortment ○ 非标准库存产品 / Non-stock Assortment

所有尺寸 / All dimensions [mm]

PRAMET

TCGT

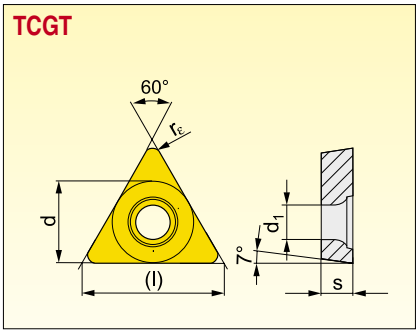

尺寸 Dimension	(l)	d	d_1	s	
0902	9.6	5.560	2.50	2.38	
1102	11.0	6.350	2.80	2.38	
16T3	16.5	9.525	4.40	3.97	

刀具 - 参见页码 / Tools - see page No.: 93, 94, 110, 115

断屑槽 Chip breaker	ISO	ANSI	材质等级 / Grades 8016	8030	HF7							半径 Radius r_ε	每转进给量 Feed per rev. f_{min}	f_{max}	切削深度 Cutting depth $a_{p\,min}$	$a_{p\,max}$
	TCGT 090202F-AL	TCGT -(1.5)(0.5)F-AL	○		○							0.2	0.06	0.12	0.3	3.0
	TCGT 090204F-AL	TCGT -(1.5)1F-AL	○		○							0.4	0.10	0.24	0.4	3.0
	TCGT 110202F-AL	TCGT 2(1.5)(0.5)F-AL	●		●							0.2	0.06	0.12	0.3	3.6
	TCGT 110204F-AL	TCGT 2(1.5)1F-AL	●		●							0.4	0.10	0.24	0.4	3.6
	TCGT 110208F-AL	TCGT 2(1.5)2F-AL	○		○							0.8	0.15	0.48	0.8	3.6
	TCGT 16T304F-AL	TCGT 3(2.5)1F-AL	●		●							0.4	0.10	0.24	0.4	5.3
	TCGT 16T308F-AL	TCGT 3(2.5)2F-AL	●		●							0.8	0.15	0.48	0.8	5.3
	TCGT 110202ER-SI	TCGT 2(1.5)(0.5)ER-SI		●								0.2	0.08	0.12	0.4	1.6
	TCGT 110204ER-SI	TCGT 2(1.5)1ER-SI		●								0.4	0.08	0.24	0.4	1.6
	TCGT 110202EL-SI	TCGT 2(1.5)(0.5)EL-SI		●								0.2	0.08	0.12	0.4	1.6
	TCGT 110204EL-SI	TCGT 2(1.5)1EL-SI		●								0.4	0.08	0.24	0.4	1.6

● 标准库存产品 / Stock Assortment ○ 非标准库存产品 / Non-stock Assortment

所有尺寸 / All dimensions [mm]

TCMT

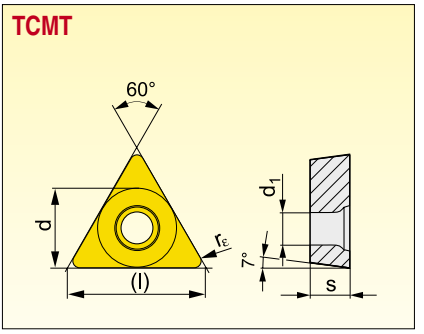

尺寸 Dimension	(l)	d	d_1	s	
1102	11.0	6.350	2.80	2.38	
16T3	16.5	9.525	4.40	3.97	

刀具 - 参见页码 / Tools - see page No.: 93, 94, 110, 115

断屑槽 Chip breaker	ISO	ANSI	材质等级 / Grades									半径 Radius	每转进给量 Feed per rev.		切削深度 Cutting depth	
			6615	6630	6640	9210	9230	9235	8016	8030	8040	r_ε	f_{min}	f_{max}	$a_{p\,min}$	$a_{p\,max}$
	TCMT 110202E-UM	TCMT 2(1.5)(0.5)E-UM							●	●		0.2	0.08	0.12	0.5	3.0
	TCMT 110204E-UM	TCMT 2(1.5)1E-UM				●			●	●		0.4	0.05	0.12	0.5	3.0
	TCMT 16T304E-UM	TCMT 3(2.5)1E-UM							●	●		0.4	0.08	0.24	0.5	3.0
	TCMT 110204E-UR	TCMT 2(1.5)1E-UR		○		●	●					0.4	0.15	0.24	0.4	2.0
	TCMT 16T304E-UR	TCMT 3(2.5)1E-UR		○		●	●					0.4	0.15	0.24	0.4	3.0
	TCMT 16T308E-UR	TCMT 3(2.5)2E-UR	●	●		●	●			●		0.8	0.08	0.30	0.8	3.0
	TCMT 110202E-46	TCMT 2(1.5)(0.5)E-46		●	●		●	●				0.2	0.05	0.12	1.0	3.0
	TCMT 110204E-46	TCMT 2(1.5)1E-46		●	●	●	●	●				0.4	0.05	0.12	1.0	3.0
	TCMT 16T308E-40	TCMT 3(2.5)2E-40	○	○		●	●				●	0.8	0.15	0.40	1.0	4.0

● 标准库存产品 / Stock Assortment ○ 非标准库存产品 / Non-stock Assortment

所有尺寸 / All dimensions [mm]

PRAMET

TCMW

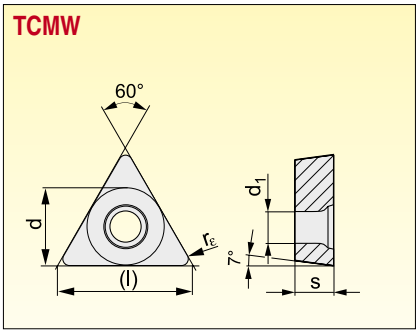

尺寸 Dimension	(l)	d	d_1	s	
1102	11.0	6.350	2.80	2.38	
16T3	16.5	9.525	4.40	3.97	

刀具 - 参见页码 / Tools - see page No.: 93, 94, 110, 115

断屑槽 Chip breaker	ISO	ANSI	材质等级 / Grades									半径 Radius	每转进给量 Feed per rev.		切削深度 Cutting depth	
			6605									r_ε	f_{min}	f_{max}	$a_{p\,min}$	$a_{p\,max}$
	TCMW 110204	TCMW 2(1.5)1	●									0.4	0.10	0.20	0.4	3.6
	TCMW 16T304	TCMW 3(2.5)1	●									0.4	0.05	0.24	0.4	4.8
	TCMW 16T308	TCMW 3(2.5)2	●									0.8	0.05	0.35	0.8	4.8

TNMA

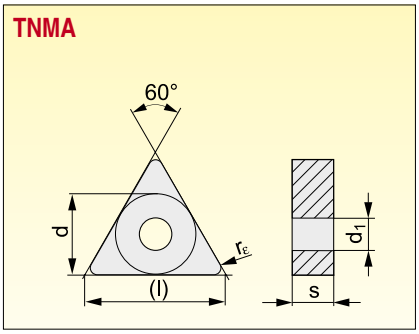

尺寸 Dimension	(l)	d	d_1	s	
1604	16.5	9.525	3.81	4.76	
2204	22.0	12.700	5.16	4.76	

刀具 - 参见页码 / Tools - see page No.: 20, 26, 44-46, 52, 62

断屑槽 Chip breaker	ISO	ANSI	材质等级 / Grades									半径 Radius	每转进给量 Feed per rev.		切削深度 Cutting depth	
			6605	6615								r_ε	f_{min}	f_{max}	$a_{p\,min}$	$a_{p\,max}$
	TNMA 160404	TNMA 331	○									0.4	0.10	0.24	0.4	4.8
	TNMA 160408	TNMA 332	●	●								0.8	0.10	0.40	0.8	4.8
	TNMA 160412	TNMA 333	○									1.2	0.10	0.40	1.2	4.8
	TNMA 220408	TNMA 432	●									0.8	0.10	0.40	0.8	6.4
	TNMA 220412	TNMA 433	●									1.2	0.10	0.40	1.2	6.4

● 标准库存产品 / Stock Assortment ○ 非标准库存产品 / Non-stock Assortment 所有尺寸 / All dimensions [mm]

TNMG

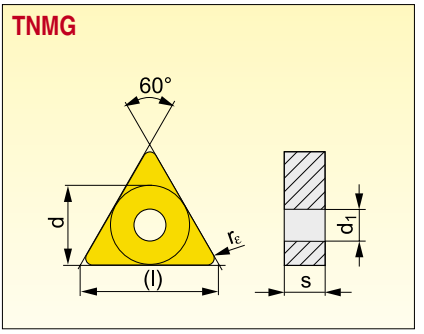

尺寸 Dimension	(l)	d	d_1	s	
1604	16.5	9.525	3.81	4.76	
2204	22.0	12.700	5.16	4.76	

刀具 - 参见页码 / Tools - see page No.: 20, 26, 44-46, 52, 62

断屑槽 Chip breaker	ISO	ANSI	材质等级 / Grades									半径 Radius	每转进给量 Feed per rev.		切削深度 Cutting depth	
			6605	6615	6630	6640	9210	9230	9235	8016	8030	r_ε	f_{min}	f_{max}	$a_{p\,min}$	$a_{p\,max}$
	TNMG 160404E-F	TNMG 331E-F		●	●			●			○	0.4	0.08	0.24	0.5	3.0
	TNMG 160408E-F	TNMG 332E-F		●				●			○	0.8	0.08	0.35	0.8	3.0
	TNMG 160404E-FF	TNMG 331E-FF								●		0.4	0.06	0.20	0.4	1.5
	TNMG 160408E-FF	TNMG 332E-FF								●		0.8	0.08	0.25	0.8	1.5
	TNMG 160404E-FM	TNMG 331E-FM					●	●			●	0.4	0.10	0.24	0.5	3.0
	TNMG 160408E-FM	TNMG 332E-FM					●	●			●	0.8	0.15	0.45	0.8	3.0
	TNMG 160412E-FM	TNMG 333E-FM					●	●			●	1.2	0.15	0.45	1.2	3.0
	TNMG 160404E-M	TNMG 331E-M		●	○		●	●				0.4	0.17	0.24	0.8	3.0
	TNMG 160408E-M	TNMG 332E-M	●	●	●	●	●	●	●			0.8	0.15	0.48	0.8	5.0
	TNMG 160412E-M	TNMG 333E-M		●	○	○	●	●				1.2	0.15	0.60	1.2	5.0
	TNMG 220408E-M	TNMG 432E-M	○	●	●	●	●	●	●			0.8	0.15	0.48	0.8	6.0
	TNMG 220412E-M	TNMG 433E-M	○	○	●	●	●	●	●			1.2	0.17	0.72	1.2	6.0
	TNMG 160408E-R	TNMG 332E-R	●	●	○	○	●	●	●			0.8	0.25	0.48	2.0	5.0
	TNMG 160412E-R	TNMG 333E-R	○	○		○	●	●	●			1.2	0.25	0.70	2.0	5.0
	TNMG 220408E-R	TNMG 432E-R	●	○	●	○	●	●	●			0.8	0.25	0.48	2.0	6.0
	TNMG 220412E-R	TNMG 433E-R	●	○	●	○	●	●	●			1.2	0.25	0.70	2.0	6.0
	TNMG 220416E-R	TNMG 434E-R	○	●	○	●	●	●	●			1.6	0.25	0.80	2.0	6.0
	TNMG 160404E-NM	TNMG 331E-NM						●	●			0.4	0.15	0.24	0.5	3.0
	TNMG 160408E-NM	TNMG 332E-NM						●	●			0.8	0.20	0.40	1.0	3.0
	TNMG 220408E-NM	TNMG 432E-NM						●	●		●	0.8	0.20	0.40	1.0	3.5
	TNMG 220412E-NM	TNMG 433E-NM						●	●			1.2	0.20	0.40	1.2	3.5
	TNMG 160404ER-SI	TNMG 331ER-SI			●			●			●	0.4	0.20	0.24	0.8	5.0
	TNMG 160408ER-SI	TNMG 332ER-SI			●			●			●	0.8	0.20	0.48	0.8	5.0
	TNMG 160404EL-SI	TNMG 331EL-SI			●			●			●	0.4	0.20	0.24	0.8	5.0
	TNMG 160408EL-SI	TNMG 332EL-SI			●			●			●	0.8	0.20	0.48	0.8	5.0

● 标准库存产品 / Stock Assortment　　○ 非标准库存产品 / Non-stock Assortment　　所有尺寸 / All dimensions [mm]

PRAMET

TNMM

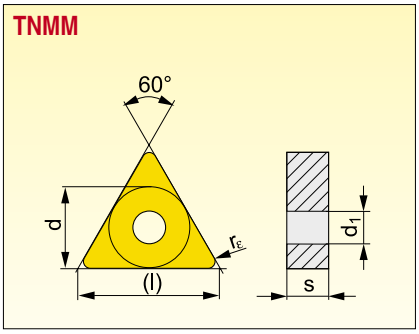

尺寸 Dimension	(l)	d	d_1	s	
1604	16.5	9.525	3.81	4.76	
2204	22.0	12.700	5.16	4.76	
2706	27.5	15.875	6.35	6.35	
3307	33.0	19.050	7.94	7.94	

刀具 - 参见页码 / Tools - see page No.: 20, 26, 44-46, 52, 62

断屑槽 Chip breaker	ISO	ANSI	材质等级 / Grades										半径 Radius	每转进给量 Feed per rev.		切削深度 Cutting depth	
			6630	6635	6640	9210	9230	9235					r_ε	f_{min}	f_{max}	$a_{p\,min}$	$a_{p\,max}$
	TNMM 160408E-DR	TNMM 332E-DR	●				●						0.8	0.30	0.48	2.5	5.3
	TNMM 220408E-DR	TNMM 432E-DR	○				●	●					0.8	0.30	0.48	2.5	7.3
	TNMM 220412E-DR	TNMM 433E-DR	○		●		●	●					1.2	0.30	0.72	2.5	7.3
	TNMM 220416E-DR	TNMM 434E-DR					●						1.6	0.30	0.85	2.5	7.3
	TNMM 270616E-DR	TNMM 544E-DR	●		●		●	●					1.6	0.30	0.85	2.5	8.9
	TNMM 270616E-HR	TNMM 544E-HR	○		○		●	●					1.6	0.50	0.96	5.0	8.9
	TNMM 270624E-HR	TNMM 546E-HR	○		○		●						2.4	0.50	1.40	5.0	8.9
	TNMM 160408E-NR2	TNMM 332E-NR2		○			●						0.8	0.20	0.48	0.8	5.3
	TNMM 220408E-NR2	TNMM 432E-NR2		○			●						0.8	0.25	0.48	0.8	7.3
	TNMM 220412E-NR2	TNMM 433E-NR2		○			●						1.2	0.30	0.70	1.2	7.3
	TNMM 160408E-OR	TNMM 332E-OR				●	●						0.8	0.25	0.45	2.0	5.0
	TNMM 160412E-OR	TNMM 333E-OR				●	●						1.2	0.30	0.60	2.0	5.3
	TNMM 220408E-OR	TNMM 432E-OR			○	●	●						0.8	0.30	0.48	2.0	6.0
	TNMM 220412E-OR	TNMM 433E-OR			○	●	●	●					1.2	0.32	0.70	2.0	7.0
	TNMM 220416E-OR	TNMM 434E-OR				●	●						1.6	0.40	0.80	3.0	7.3
	TNMM 220412ER	TNMM 433ER			●			●					1.2	0.20	0.50	1.2	5.0
	TNMM 220412EL	TNMM 433EL			○			●					1.2	0.20	0.50	1.2	5.0
	TNMM 330716E-90	TNMM 654E-90			○								1.6	0.40	0.96	3.0	10.9

● 标准库存产品 / Stock Assortiment ○ 非标准库存产品 / Non-stock Assortiment

所有尺寸 / All dimensions [mm]

TPMR

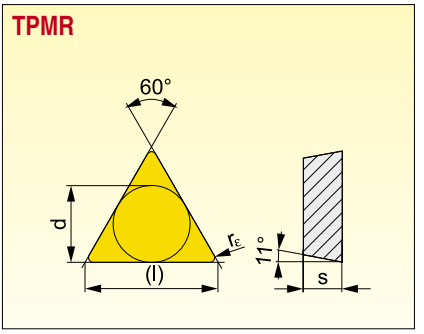

尺寸 Dimension	(l)	d	s		
1103	11.0	6.350	3.18		
1603	16.5	9.525	3.18		

刀具 - 参见页码 / Tools - see page No.: 9 - 11, 14, 15

断屑槽 Chip breaker	ISO	ANSI	材质等级 / Grades										半径 Radius	每转进给量 Feed per rev.		切削深度 Cutting depth	
			6620	6630	6640	9230	9235						r_ε	f_{min}	f_{max}	$a_{p\,min}$	$a_{p\,max}$
	TPMR 110304E-46	TPMR 221E-46	○	●	●	●	●						0.4	0.10	0.24	1.0	3.0
	TPMR 110308E-46	TPMR 222E-46	○	●	●	●	●						0.8	0.10	0.40	1.0	3.0
	TPMR 160304E-47	TPMR 321E-47	○	●	●	●	●						0.4	0.10	0.24	0.8	4.0
	TPMR 160308E-47	TPMR 322E-47	○	●	●	●	●						0.8	0.10	0.40	0.8	4.0
	TPMR 160312E-47	TPMR 323E-47		●		●	●						1.2	0.10	0.40	1.2	4.0
	TPMR 160308E-61	TPMR 322E-61		●	●	●	●						0.8	0.30	0.48	1.0	5.3

● 标准库存产品 / Stock Assortment ○ 非标准库存产品 / Non-stock Assortment

所有尺寸 / All dimensions [mm]

PRAMET

TPUN

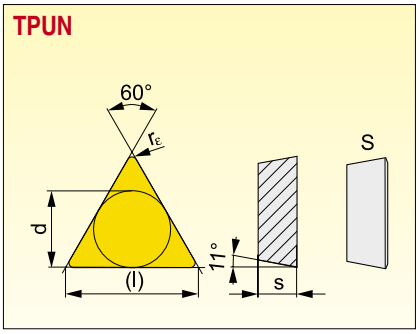

尺寸 Dimension	(l)	d	s		
1103	11.0	6.350	3.18		
1603	16.5	9.525	3.18		
2204	22.0	12.700	4.76		
2706	27.5	15.875	6.35		
3306	33.0	19.050	6.35		

刀具 - 参见页码 / Tools - see page No.: 9, 10, 11, 14, 15

断屑槽 Chip breaker	ISO	ANSI	材质等级 / Grades									半径 Radius	每转进给量 Feed per rev.		切削深度 Cutting depth	
			6640	8016								r_ε	f_{min}	f_{max}	$a_{p\,min}$	$a_{p\,max}$
	TPUN 110304	TPUN 221	●	○								0.4	0.10	0.24	0.4	3.6
	TPUN 110308	TPUN 222	●	○								0.8	0.10	0.30	0.8	3.6
	TPUN 160304	TPUN 321	●	●								0.4	0.10	0.24	0.4	4.8
	TPUN 160308	TPUN 322	●	●								0.8	0.10	0.30	0.8	4.8
	TPUN 160312	TPUN 323	●	○								1.2	0.10	0.30	1.2	4.8
	TPUN 220408	TPUN 432	●	●								0.8	0.10	0.40	0.8	6.4
	TPUN 220412	TPUN 433	●	○								1.2	0.10	0.40	1.2	6.4
	TPUN 270616S	TPUN 544S	●									1.6	0.20	0.45	1.6	7.8
	TPUN 330620S	TPUN 645S	●									2.0	0.20	0.45	2.0	9.5

● 标准库存产品 / Stock Assortiment ○ 非标准库存产品 / Non-stock Assortiment

所有尺寸 / All dimensions [mm]

VBMT

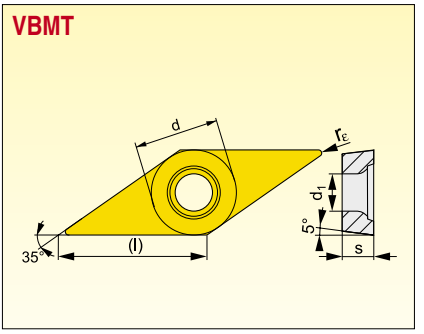

尺寸 Dimension	(l)	d	d_1	s	
1102	11.1	6.350	2.90	2.38	
1604	16.6	9.525	4.50	4.76	

刀具 - 参见页码 / Tools - see page No.: 95-99, 111, 112

断屑槽 Chip breaker	ISO	ANSI	材质等级 / Grades									半径 Radius	每转进给量 Feed per rev.		切削深度 Cutting depth	
			6615	6630	9210	9230	8030					r_ε	f_{min}	f_{max}	$a_{p\,min}$	$a_{p\,max}$
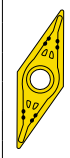	**VBMT 110204E-UR**	VBMT 2(1.5)1E-UR				●	●					0.4	0.08	0.20	0.4	2.0
	VBMT 160402E-UR	VBMT 33(0.5)E-UR					●					0.2	0.05	0.10	0.2	2.0
	VBMT 160404E-UR	VBMT 331E-UR	●	●	●	●	●					0.4	0.08	0.20	0.4	2.0
	VBMT 160408E-UR	VBMT 332E-UR	●	●	●	●	●					0.8	0.08	0.30	0.8	3.0
	VBMT 160412E-UR	VBMT 333E-UR		○	●	●						1.2	0.15	0.30	1.2	3.0

VCGT

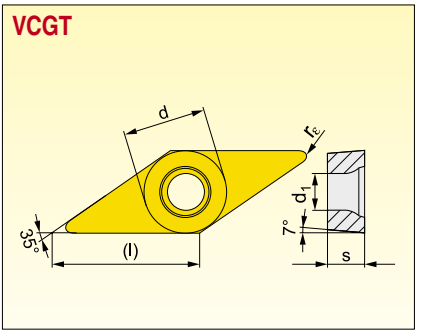

尺寸 Dimension	(l)	d	d_1	s	
1103	11.1	6.350	2.80	3.18	
1604	16.6	9.525	4.40	4.76	

刀具 - 参见页码 / Tools - see page No.: 95-99, 111, 112

断屑槽 Chip breaker	ISO	ANSI	材质等级 / Grades									半径 Radius	每转进给量 Feed per rev.		切削深度 Cutting depth	
			8016	HF7								r_ε	f_{min}	f_{max}	$a_{p\,min}$	$a_{p\,max}$
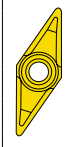	**VCGT 110302F-AL**	VCGT 22(0.5)F-AL	●	●								0.2	0.06	0.10	0.3	2.8
	VCGT 110304F-AL	VCGT 221F-AL	●	●								0.4	0.10	0.20	0.4	2.8
	VCGT 160402F-AL	VCGT 33(0.5)F-AL	●	●								0.2	0.06	0.10	0.3	4.0
	VCGT 160404F-AL	VCGT 331F-AL	●	●								0.4	0.10	0.20	0.4	4.0
	VCGT 160408F-AL	VCGT 332F-AL	●	●								0.8	0.15	0.40	0.8	4.0
	VCGT 160412F-AL	VCGT 333F-AL	●	●								1.2	0.15	0.60	1.2	4.0

● 标准库存产品 / Stock Assortiment　　○ 非标准库存产品 / Non-stock Assortiment　　所有尺寸 / All dimensions [mm]

PRAMET

VCMT

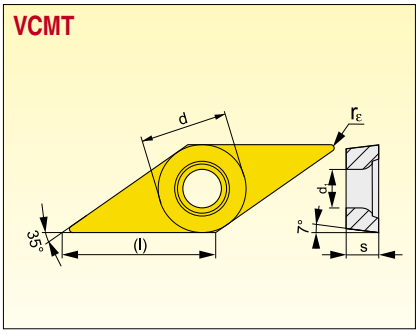

尺寸 Dimension	(l)	d	d_1	s	
1103	11.1	6.350	2.80	3.18	
1604	16.6	9.525	4.40	4.76	

刀具 - 参见页码 / Tools - see page No.: 95-99, 111, 112

断屑槽 Chip breaker	ISO	ANSI	材质等级 / Grades									半径 Radius	每转进给量 Feed per rev.		切削深度 Cutting depth	
			6615	6630	6640	9210	9230	9235	8016	8030		r_ε	f_{min}	f_{max}	$a_{p\,min}$	$a_{p\,max}$
	VCMT 110304E-UM	VCMT 221E-UM	○	●		●	●		●	●		0.4	0.08	0.20	0.5	2.8
	VCMT 110308E-UM	VCMT 222E-UM	○	○		●	●			●		0.8	0.08	0.25	0.8	2.8
	VCMT 160404E-UM	VCMT 331E-UM	●	●		●	●		●	●		0.4	0.08	0.20	0.5	3.0
	VCMT 160408E-UM	VCMT 332E-UM	●	●		●	●			●		0.8	0.08	0.25	0.8	3.0
	VCMT 160412E-UM	VCMT 333E-UM		○			●			○		1.2	0.08	0.25	1.2	3.0
	VCMT 160404E-42	VCMT 331E-42			●	●	●	●	●	●		0.4	0.09	0.20	0.5	4.0
	VCMT 160408E-47	VCMT 332E-47	●	●	●	●	●	●				0.8	0.10	0.40	0.8	4.0

● 标准库存产品 / Stock Assortiment ○ 非标准库存产品 / Non-stock Assortiment

所有尺寸 / All dimensions [mm]

VCMW

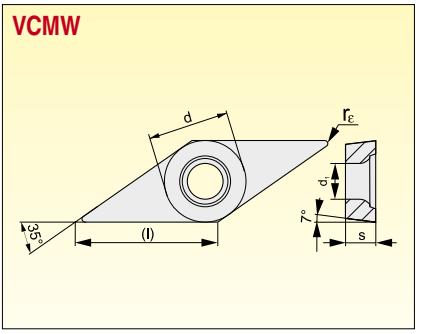

尺寸 Dimension	(l)	d	d_1	s	
1103	11.1	6.35	2.8	3.18	
1604	16.5	9.525	4.4	4.76	

刀具 - 参见页码 / Tools - see page No.: 95-99, 111, 112

断屑槽 Chip breaker	ISO	ANSI	材质等级 / Grades									半径 Radius	每转进给量 Feed per rev.		切削深度 Cutting depth	
			6605									r_ε	f_{min}	f_{max}	$a_{p\,min}$	$a_{p\,max}$
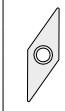	**VCMW 110302**	VCMW 22(0.5)	○									0.2	0.05	0.10	0.2	2.4
	VCMW 110304	VCMW 221	○									0.4	0.05	0.20	0.4	2.4
	VCMW 160404	VCMW 331	●									0.4	0.05	0.20	0.4	3.7
	VCMW 160408	VCMW 332	●									0.8	0.05	0.40	0.8	3.7

● 标准库存产品 / Stock Assortment ○ 非标准库存产品 / Non-stock Assortment

所有尺寸 / All dimensions [mm]

PRAMET

VNMG

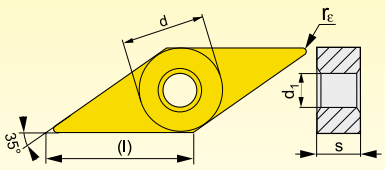

尺寸 Dimension	(l)	d	d_1	s	
1604	16.5	9.525	3.81	4.76	

刀具 - 参见页码 / Tools - see page No.: 27

断屑槽 Chip breaker	ISO	ANSI	材质等级 / Grades									半径 Radius	每转进给量 Feed per rev.		切削深度 Cutting depth	
			6605	6615	6630	6640	9210	9230	9235	8016	8030	r_ε	f_{min}	f_{max}	$a_{p\,min}$	$a_{p\,max}$
	VNMG 160404E-F	VNMG 331E-F		○				○			○	0.4	0.08	0.20	0.5	3.0
	VNMG 160404E-FF	VNMG 331E-FF								●		0.4	0.06	0.20	0.4	1.5
	VNMG 160404E-FM	VNMG 331E-FM					●	●			●	0.4	0.10	0.20	0.5	3.0
	VNMG 160408E-FM	VNMG 332E-FM					●	●			●	0.8	0.15	0.35	0.8	3.0
	VNMG 160412E-FM	VNMG 333E-FM					●	●			●	1.2	0.15	0.45	1.2	3.0
	VNMG 160404E-M	VNMG 331E-M	○	●	○		●	●				0.4	0.05	0.20	0.8	3.0
	VNMG 160408E-M	VNMG 332E-M	○	●	●		●	●	●			0.8	0.15	0.40	0.8	3.0
	VNMG 160412E-M	VNMG 333E-M			○		●	●				1.2	0.15	0.60	1.2	3.0
	VNMG 160404E-NM	VNMG 331E-NM						●	●			0.4	0.15	0.20	0.5	3.0
	VNMG 160408E-NM	VNMG 332E-NM						●	●			0.8	0.20	0.40	0.8	3.0

● 标准库存产品 / Stock Assortment ○ 非标准库存产品 / Non-stock Assortment

所有尺寸 / All dimensions [mm]

WCGT

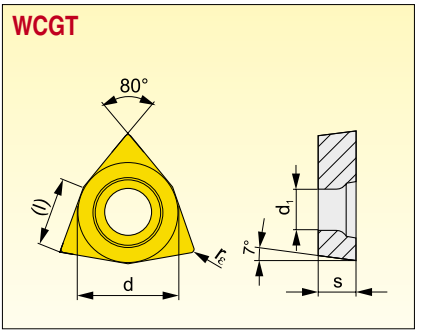

尺寸 Dimension	(l)	d	d_1	s	
06T3	6.5	9.525	4.40	3.97	
0804	8.7	12.700	5.50	4.76	

刀具 - 参见页码 / Tools - see page No.: 100, 113

断屑槽 Chip breaker	ISO	ANSI	材质等级 / Grades									半径 Radius	每转进给量 Feed per rev.		切削深度 Cutting depth	
			8016	HF7								r_ε	f_{min}	f_{max}	$a_{p\,min}$	$a_{p\,max}$
	WCGT 06T302F-AL	WCGT 3(2.5)(0.5)F-AL	○	●								0.2	0.06	0.15	0.3	3.0
	WCGT 06T304F-AL	WCGT 3(2.5)1F-AL	○	●								0.4	0.08	0.30	0.4	3.5
	WCGT 06T308F-AL	WCGT 3(2.5)2F-AL	○	●								0.8	0.08	0.60	0.8	4.2
	WCGT 080412F-AL	WCGT 433F-AL	○	●								1.2	0.15	0.60	1.2	5.6

● 标准库存产品 / Stock Assortment ○ 非标准库存产品 / Non-stock Assortment

所有尺寸 / All dimensions [mm]

PRAMET

WCMT

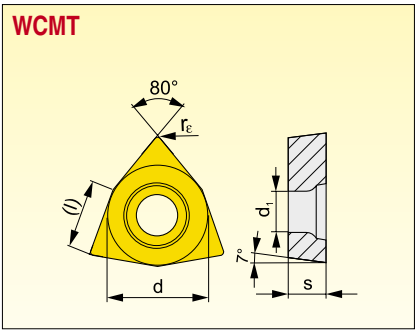

尺寸 Dimension	(l)	d	d_1	s	
06T3	6.5	9.525	4.40	3.97	
0804	8.7	12.700	5.50	4.76	

刀具 - 参见页码 / Tools - see page No.: 100, 113

断屑槽 Chip breaker	ISO	ANSI	材质等级 / Grades									半径 Radius	每转进给量 Feed per rev.		切削深度 Cutting depth	
			6615	6630	6640	9210	9230	9235	8016	8030		r_ε	f_{min}	f_{max}	$a_{p\,min}$	$a_{p\,max}$
	WCMT 06T304E-UM	WCMT 3(2.5)1E-UM	●			●	●		●	●		0.4	0.08	0.25	0.5	3.0
	WCMT 06T308E-UM	WCMT 3(2.5)2E-UM	○			●	●		●	●		0.8	0.08	0.25	0.8	3.0
	WCMT 080404E-UM	WCMT 431E-UM	○			●	●		○	●		0.4	0.08	0.25	0.5	3.0
	WCMT 080408E-UM	WCMT 432E-UM	○			●	●		○	●		0.8	0.08	0.25	0.8	3.0
	WCMT 06T308E-UR	WCMT 3(2.5)2E-UR		○			●					0.8	0.15	0.30	0.8	3.0
	WCMT 06T308E-47	WCMT 3(2.5)2E-47	●		●	●	●	●				0.8	0.10	0.40	0.8	4.0
	WCMT 080412E-48	WCMT 433E-48	○	●	●	●	●			●		1.2	0.20	0.70	1.2	5.6

● 标准库存产品 / Stock Assortment　　○ 非标准库存产品 / Non-stock Assortment　　所有尺寸 / All dimensions [mm]

WNMA

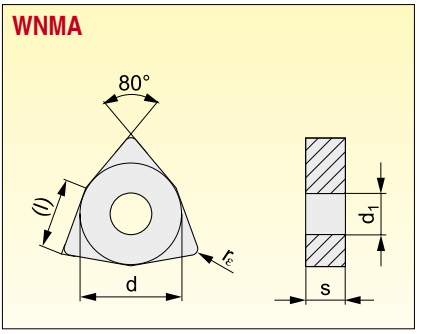

尺寸 Dimension	(l)	d	d_1	s	
0804	8.69	12.700	5.16	4.76	

刀具 - 参见页码 / Tools - see page No.: 21, 28, 47, 53, 79

断屑槽 Chip breaker	ISO	ANSI	材质等级 / Grades									半径 Radius	每转进给量 Feed per rev.		切削深度 Cutting depth	
			6605	6615								r_ε	f_{min}	f_{max}	$a_{p\,min}$	$a_{p\,max}$
	WNMA 080404	WNMA 431	●									0.4	0.10	0.30	0.4	4.4
	WNMA 080408	WNMA 432	●	●								0.8	0.10	0.60	0.8	4.4
	WNMA 080412	WNMA 433	●	●								1.2	0.10	0.60	1.2	4.4

● 标准库存产品 / Stock Assortment　　○ 非标准库存产品 / Non-stock Assortment　　所有尺寸 / All dimensions [mm]

PRAMET

WNMG

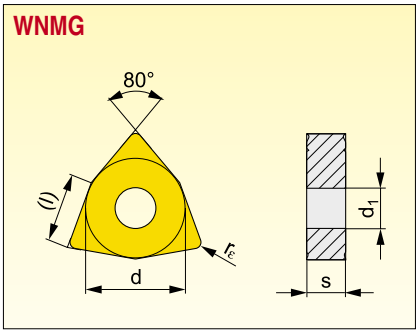

尺寸 Dimension	(l)	d	d_1	s	
0604	6.5	9.525	3.81	4.76	
06T3	6.5	9.525	3.81	3.97	
0804	8.7	12.700	5.16	4.76	

刀具 - 参见页码 / Tools - see page No.: 21, 28, 47, 53.,79

断屑槽 Chip breaker	ISO	ANSI	材质等级 / Grades									半径 Radius	每转进给量 Feed per rev.		切削深度 Cutting depth	
			6605	6615	6630	6640	9210	9230	9235	8016	8030	r_ε	f_{min}	f_{max}	$a_{p\,min}$	$a_{p\,max}$
	WNMG 06T308E-DM	WNMG 3(2.5)2E-DM						●				0.8	0.15	0.60	1.0	4.2
	WNMG 080408E-DM	WNMG 432E-DM						●	●			0.8	0.15	0.60	1.0	5.6
	WNMG 060404E-F	WNMG 331E-F		○				●		○	●	0.4	0.08	0.30	0.5	3.0
	WNMG 080404E-F	WNMG 431E-F		●	○			●		●	●	0.4	0.08	0.30	0.5	3.0
	WNMG 080408E-F	WNMG 432E-F		●	○			●		●	●	0.8	0.08	0.35	0.8	3.0
	WNMG 060402E-FF	WNMG 33(0.5)E-FF								●		0.2	0.06	0.15	0.2	1.5
	WNMG 060404E-FF	WNMG 331E-FF								●		0.4	0.06	0.20	0.4	1.5
	WNMG 080404E-FF	WNMG 431E-FF								●		0.4	0.06	0.20	0.4	1.5
	WNMG 080408E-FF	WNMG 432E-FF								●		0.8	0.08	0.25	0.8	1.5
	WNMG 060404E-FM	WNMG 331E-FM					●	●			●	0.4	0.10	0.30	0.5	3.0
	WNMG 060408E-FM	WNMG 332E-FM					●	●			●	0.8	0.10	0.35	0.8	3.0
	WNMG 080404E-FM	WNMG 431E-FM					●	●			●	0.4	0.10	0.30	0.5	3.0
	WNMG 080408E-FM	WNMG 432E-FM					●	●			●	0.8	0.15	0.45	0.8	3.0
	WNMG 080412E-FM	WNMG 433E-FM					●	●			●	1.2	0.15	0.45	1.2	4.0
	WNMG 060404E-M	WNMG 331E-M		○			●	●				0.4	0.17	0.30	0.8	3.0
	WNMG 060408E-M	WNMG 332E-M		●	○	●	●	●	●			0.8	0.15	0.60	0.8	4.0
	WNMG 080404E-M	WNMG 431E-M		●	○		●	●				0.4	0.17	0.30	0.8	3.0
	WNMG 080408E-M	WNMG 432E-M	●	●	●	●	●	●	●	○		0.8	0.15	0.60	0.8	5.6
	WNMG 080412E-M	WNMG 433E-M	●	●	●	●	●	●	●			1.2	0.15	0.60	1.2	5.6
	WNMG 080408E-R	WNMG 432E-R	●	●	●	●	●	●	●			0.8	0.25	0.60	2.0	5.6
	WNMG 080412E-R	WNMG 433E-R	●	●	●	○	●	●	●			1.2	0.25	0.70	2.0	5.6
	WNMG 080416E-R	WNMG 434E-R	○	●			●	●				1.6	0.30	0.80	2.0	5.6
	WNMG 060408W-F	WNMG 332W-F		○			●	●				0.8	0.15	0.60	0.8	4.2
	WNMG 080404W-F	WNMG 431W-F		○			●	●				0.4	0.15	0.30	0.4	4.4

● 标准库存产品 / Stock Assortiment　　○ 非标准库存产品 / Non-stock Assortiment　　所有尺寸 / All dimensions [mm]

断屑槽 Chip breaker	ISO	ANSI	材质等级 / Grades									半径 Radius	每转进给量 Feed per rev.		切削深度 Cutting depth	
			6605	6615	6630	6640	9210	9230	9235	8016	8030	re	f_{min}	f_{max}	$a_{p\,min}$	$a_{p\,max}$
	WNMG 060408W-M	WNMG 332W-M		○			●	●				0.8	0.15	0.60	0.8	3.0
	WNMG 060412W-M	WNMG 333W-M		○			●	●				1.2	0.15	0.90	1.2	3.0
	WNMG 080408W-M	WNMG 432W-M		●			●	●				0.8	0.15	0.60	0.8	4.0
	WNMG 080412W-M	WNMG 433W-M		○			●	●				1.2	0.20	0.90	1.2	4.0
	WNMG 060404E-NM	WNMG 331E-NM						●	●			0.4	0.15	0.30	0.5	3.0
	WNMG 060408E-NM	WNMG 332E-NM						●	●			0.8	0.20	0.40	0.8	3.0
	WNMG 060412E-NM	WNMG 333E-NM						○	●			1.2	0.20	0.50	1.2	3.5
	WNMG 080404E-NM	WNMG 431E-NM						●	●			0.4	0.15	0.30	0.5	3.0
	WNMG 080408E-NM	WNMG 432E-NM						●	●		●	0.8	0.20	0.50	0.8	3.0
	WNMG 080412E-NM	WNMG 433E-NM						●	●			1.2	0.20	0.50	1.2	3.5
	WNMG 060404ER-SI	WNMG 331ER-SI						●			○	0.4	0.20	0.30	0.8	4.2
	WNMG 080404ER-SI	WNMG 431ER-SI						●			●	0.4	0.20	0.30	0.8	5.0
	WNMG 080408ER-SI	WNMG 432ER-SI			○			●			●	0.8	0.20	0.50	0.8	5.0
	WNMG 060404EL-SI	WNMG 331EL-SI						●			○	0.4	0.20	0.30	0.8	4.2
	WNMG 080404EL-SI	WNMG 431EL-SI						●			●	0.4	0.20	0.30	0.8	5.0
	WNMG 080408EL-SI	WNMG 432EL-SI			○			●			●	0.8	0.20	0.50	0.8	5.0

● 标准库存产品 / Stock Assortment ○ 非标准库存产品 / Non-stock Assortment

所有尺寸 / All dimensions [mm]

WNMM

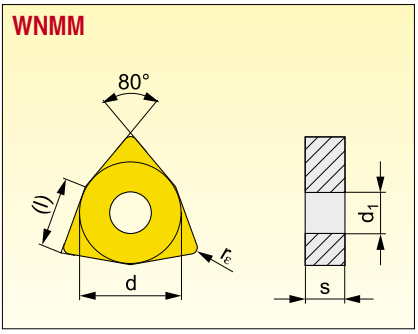

尺寸 Dimension	(l)	d	d_1	s	
0804	8.7	12.700	5.16	4.76	
1006	10.8	15.875	6.35	6.35	
1306	13.0	19.050	7.94	6.35	

刀具 - 参见页码 / Tools - see page No.:21, 28, 47, 53, 79

断屑槽 Chip breaker	ISO	ANSI	材质等级 / Grades									半径 Radius	每转进给量 Feed per rev.		切削深度 Cutting depth	
			6630	6640	9210	9230	9235	8030				r_ε	f_{min}	f_{max}	$a_{p\,min}$	$a_{p\,max}$
	WNMM 100608E-DR	WNMM 542E-DR	●			●						0.8	0.30	0.60	2.5	7.0
	WNMM 130612E-DR	WNMM 643E-DR	●			●						1.2	0.30	0.85	2.5	9.0
	WNMM 080408E-NR	WNMM 432E-NR		●		●	●	●				0.8	0.25	0.60	1.0	5.6
	WNMM 080408E-NR2	WNMM 432E-NR2				●	●					0.8	0.25	0.60	1.0	5.0
	WNMM 080412E-NR2	WNMM 433E-NR2				●	●					1.2	0.25	0.80	1.2	5.6
	WNMM 080408E-OR	WNMM 432E-OR		●	●	●	●					0.8	0.25	0.60	2.0	5.0
	WNMM 080412E-OR	WNMM 433E-OR		●	●	●	●					1.2	0.32	0.70	2.0	5.6
	WNMM 080416E-OR	WNMM 434E-OR				●						1.6	0.35	1.00	3.0	5.6
	WNMM 130612E-OR	WNMM 643E-OR				●						1.2	0.32	0.70	2.0	9.0
	WNMM 130616E-OR	WNMM 644E-OR				●						1.6	0.35	1.00	3.0	9.0

● 标准库存产品 / Stock Assortiment　　○ 非标准库存产品 / Non-stock Assortiment　　所有尺寸 / All dimensions [mm]

LCMF 13

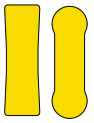

197

LCMF 16. 20

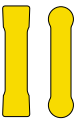

198

LCMX ....MOEN

199

LCMX .....T.

200

LFMX

201

LFUX

202

TN 16ER/L ...ZZ

203

TN 16NR/L ...ZZ

204

LCMF 13

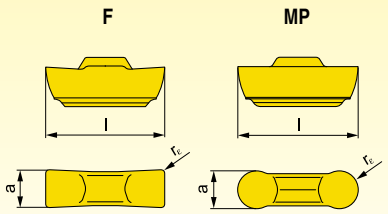

尺寸 a，带公差 / Dimension a in the tolerances ± 0.05 [mm]

尺寸 Dimension	a	l			
0313	3.00	12.60			
0413	4.00	12.60			

刀具 - 参见页码 / Tools - see page No.: 122 - 125

断屑槽 Chip breaker	ISO	ANSI	材质等级 / Grades 6630	8030								r_ε	每转进给量 Feed per rev. f_{min}	f_{max}	切削深度 Cutting depth $a_{p\,min}$	$a_{p\,max}$
	LCMF 031304-F			●								0.4	0.05	0.20	0.3	3.0
	LCMF 041304-F		●	●								0.4	0.05	0.25	0.5	3.0
	LCMF 0313MO-MP			●								1.5	0.05	0.30	0.5	1.5
	LCMF 0413MO-MP			●								2.0	0.05	0.35	0.5	2.0

使用区域 - 参见页码 / Area of use - see pages 260

● 标准库存产品 / Stock Assortment　　○ 非标准库存产品 / Non-stock Assortment　　所有尺寸 / All dimensions [mm]

LCMF F. F1. M

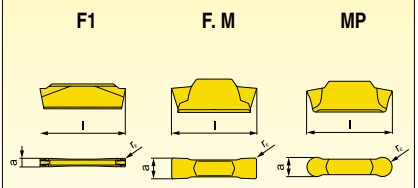

尺寸 a，带公差 / Dimension a in the tolerances ± 0.05 [mm]

尺寸 Dimension	a	l			
0220	2.00	19.50			
0316	3.00	16.40			
0416	4.00	16.40			
0516	5.00	16.40			
0616	6.00	16.40			

刀具 - 参见页码 / Tools - see page No.: 121 - 124

断屑槽 Chip breaker	ISO	ANSI	材质等级 / Grades 6630	8030								r_ε	每转进给量 Feed per rev. f_{min}	f_{max}	切削深度 Cutting depth $a_{p\,min}$	$a_{p\,max}$
	LCMF 031602-F			●								0.2	0.05	0.17	0.3	3.0
	LCMF 031604-F			●								0.4	0.05	0.17	0.3	3.0
	LCMF 041604-F		●	●								0.4	0.08	0.25	0.5	3.0
	LCMF 041608-F		○	●								0.8	0.08	0.25	0.5	3.0
	LCMF 051608-F		○	●								0.8	0.10	0.30	0.5	3.0
	LCMF 061608-F		○	●								0.8	0.10	0.35	0.5	3.0
	LCMF 022002-F1			●								0.2	0.08	0.20	0.2	2.0
	LCMF 031602-M			●								0.2	0.10	0.25	0.3	3.0
	LCMF 031604-M			●								0.4	0.10	0.25	0.3	3.0
	LCMF 041604-M		●	●								0.4	0.15	0.35	0.5	3.0
	LCMF 041608-M		○	●								0.8	0.15	0.35	0.5	3.0
	LCMF 051608-M		○	●								0.8	0.18	0.43	0.5	3.0
	LCMF 061608-M		○	●								0.8	0.20	0.50	0.5	3.0
	LCMF 0316MO-MP			●								1.5	0.10	0.40	0.5	1.5
	LCMF 0416MO-MP		○	●								2.0	0.10	0.60	0.8	2.0
	LCMF 0516MO-MP		○	●								2.5	0.10	0.70	0.8	2.5
	LCMF 0616MO-MP		○	●								3.0	0.10	0.80	1.0	3.0

使用区域 - 参见页码 / Area of use - see pages 261-262

● 标准库存产品 / Stock Assortiment　　○ 非标准库存产品 / Non-stock Assortiment　　所有尺寸 / All dimensions [mm]

PRAMET

LCMX ....MOEN

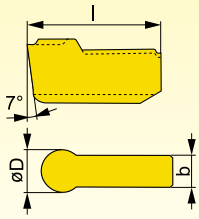

尺寸 Dimension	D	tol. D	b	l	
0305	3.00	±0.08	2.20	12.200	
0405	4.00	±0.08	3.00	12.600	
0505	5.00	±0.08	4.00	13.100	
0605	6.00	±0.08	5.00	13.600	

断屑槽 Chip breaker	ISO	ANSI	材质等级 / Grades									r_ε	每转进给量 Feed per rev.		切削深度 Cutting depth	
			6640	8030									f_{min}	f_{max}	$a_{p\,min}$	$a_{p\,max}$
	LCMX 0305MOEN		○	○								1.5	0.05	0.40	0.5	1.5
	LCMX 0405MOEN		○	○								2.0	0.07	0.45	0.8	1.8
	LCMX 0505MOEN		○	○								2.5	0.07	0.50	1.0	2.3
	LCMX 0605MOEN		○	○								3.0	0.07	0.60	1.5	2.5

● 标准库存产品 / Stock Assortment ○ 非标准库存产品 / Non-stock Assortment 所有尺寸 / All dimensions [mm]

LCMX .....TN

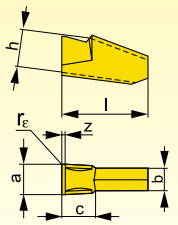

z = 0,07 [mm]

尺寸 a，带公差 / Dimension a in the tolerances $^{+0.20}_{+0.05}$ mm

尺寸 Dimension	a	b	c	h	l
0205	2.65	2.20	4.90	5.00	13.500
0305	3.15	2.70	4.90	5.00	13.500
0405	4.15	3.70	4.90	5.00	13.500
0505	5.15	4.70	4.90	5.00	13.500

刀具 - 参见页码 / Tools - see page No.: 126, 127, 135

断屑槽 Chip breaker	ISO	ANSI	材质等级 / Grades									r_ε	每转进给量 Feed per rev.		切削深度 Cutting depth	
			6640	8030									f_{min}	f_{max}	$a_{p\,min}$	$a_{p\,max}$
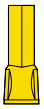	**LCMX 020502TN**		●	●								0.2	0.05	0.15	-	-
	LCMX 030502TN		●	●								0.2	0.05	0.15	-	-
	LCMX 040502TN		●	●								0.2	0.07	0.17	-	-
	LCMX 050502TN		●	●								0.2	0.10	0.20	-	-

● 标准库存产品 / Stock Assortment　　○ 非标准库存产品 / Non-stock Assortment　　所有尺寸 / All dimensions [mm]

PRAMET

LFMX

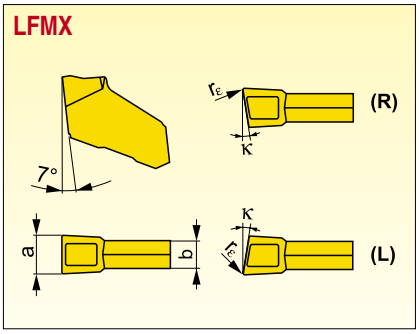

尺寸 Dimension	a	tol.a	b	r_ε	
1.60	1.60	±0.03	1.30	0.16	
2.00	2.00	±0.03	1.60	0.16	
2.20	2.20	±0.03	1.60	0.16	
3.10	3.10	±0.04	2.60	0.20	
4.10	4.10	±0.04	3.60	0.20	
5.10	5.10	±0.04	4.60	0.20	
6.35	6.35	±0.04	5.80	0.20	

刀具 - 参见页码 / Tools - see page No.: 129, 130, 133

断屑槽 Chip breaker	ISO	ANSI	材质等级 / Grades 6640	8030								κ°	每转进给量 Feed per rev. f_{min}	f_{max}	切削深度 Cutting depth $a_{p\,min}$	$a_{p\,max}$
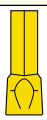	**LFMX 2.00-0.16EN-F1**		○	●								0	0.05	0.12	-	-
	LFMX 3.10-0.20EN-F1		○	●								0	0.05	0.15	-	-
	LFMX 4.10-0.20EN-F1		○	○								0	0.05	0.18	-	-
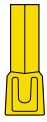	**LFMX 1.60-0.16SN-F2**			●								0	0.05	0.10	-	-
	LFMX 2.00-0.16SN-F2		●	●								0	0.05	0.15	-	-
	LFMX 3.10-0.20SN-F2		●	●								0	0.08	0.17	-	-
	LFMX 3.10-0.20TN-F2		●	●								0	0.05	0.17	-	-
	LFMX 4.10-0.20SN-F2		○	●								0	0.08	0.22	-	-
	LFMX 4.10-0.20TN-F2		○	●								0	0.05	0.22	-	-
	LFMX 5.10-0.20SN-F2		●	●								0	0.08	0.25	-	-
	LFMX 6.35-0.20SN-F2		○	○								0	0.08	0.30	-	-
	LFMX 2.00-0.16SN-M2		●	●								0	0.08	0.17	-	-
	LFMX 2.20-0.16SN-M2		●	●								0	0.08	0.17	-	-
	LFMX 3.10-0.20SN-M2		●	●								0	0.08	0.20	-	-
	LFMX 3.10-0.20TN-M2		●	●								0	0.05	0.20	-	-
	LFMX 4.10-0.20SN-M2		●	●								0	0.08	0.25	-	-
	LFMX 4.10-0.20TN-M2		○	●								0	0.05	0.25	-	-
	LFMX 5.10-0.20SN-M2		●	●								0	0.08	0.30	-	-
	LFMX 6.35-0.20SN-M2		●	●								0	0.08	0.35	-	-
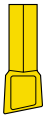	**LFMX 2.00-0.16SR6-M2**		○	●								6	0.05	0.14	-	-
	LFMX 2.00-0.16SR12-M2		○	●								12	0.05	0.12	-	-
	LFMX 3.10-0.20SR8-M2		●	●								8	0.07	0.16	-	-
	LFMX 4.10-0.20SR8-M2		●	●								8	0.07	0.20	-	-
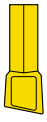	**LFMX 2.00-0.16SL6-M2**		○	●								6	0.05	0.14	-	-
	LFMX 2.00-0.16SL12-M2		○	●								12	0.05	0.12	-	-
	LFMX 3.10-0.20SL8-M2		●	●								8	0.07	0.16	-	-
	LFMX 4.10-0.20SL8-M2		●	●								8	0.07	0.20	-	-

● 标准库存产品 / Stock Assortment ○ 非标准库存产品 / Non-stock Assortment

所有尺寸 / All dimensions [mm]

LFUX

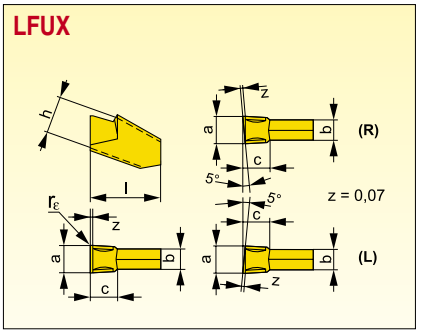

尺寸 Dimension	a	b	c	l	h
0308	3.00	2.51	4.90	11.500	8.00
0408	4.00	3.44	4.90	11.500	8.00
0508	5.00	4.30	4.90	11.500	8.00
0608	6.00	5.30	4.90	11.500	8.00

刀具 - 参见页码 / Tools - see page No.: 131, 132, 135, 136

断屑槽 Chip breaker	ISO	ANSI	材质等级 / Grades 6640	8030								r_ε	每转进给量 Feed per rev. f_{min}	f_{max}	切削深度 Cutting depth $a_{p\,min}$	$a_{p\,max}$
	LFUX 030802TN		●	●								0.2	0.10	0.15	-	-
	LFUX 040802TN		●	●								0.2	0.10	0.17	-	-
	LFUX 050802TN		●	●								0.2	0.12	0.20	-	-
	LFUX 060802TN		●	●								0.2	0.15	0.30	-	-
	LFUX 030800TR		●	●								0.2	0.10	0.15	-	-
	LFUX 040800TR		●	●								0.2	0.10	0.17	-	-
	LFUX 030800TL		●	●								0.2	0.10	0.15	-	-

● 标准库存产品 / Stock Assortment ○ 非标准库存产品 / Non-stock Assortment

所有尺寸 / All dimensions [mm]

PRAMET

TN 16ER/L ...ZZ DIN 471

EXTERNAL / EXTERNO

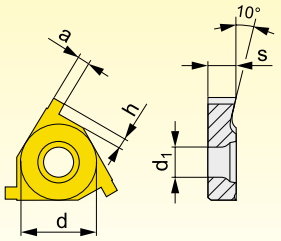

尺寸 Dimension	d	d_1	s		
16	9.525	3.90	3.40		

刀具 - 参见页码 / Tools - see page No.: 139

断屑槽 Chip breaker	ISO	ANSI	材质等级 / Grades							a	h	每转进给量 Feed per rev.		切削深度 Cutting depth	
			8030									f_{min}	f_{max}	$a_{p\,min}$	$a_{p\,max}$
	TN 16ER110ZZ		●							1.10	1.30	-	-	-	-
	TN 16ER130ZZ		●							1.30	1.60	-	-	-	-
	TN 16ER160ZZ		●							1.60	1.85	-	-	-	-
	TN 16ER185ZZ		●							1.85	1.85	-	-	-	-
	TN 16ER215ZZ		●							2.15	2.05	-	-	-	-
	TN 16ER265ZZ		●							2.65	2.05	-	-	-	-
	TN 16EL110ZZ		●							1.10	1.30	-	-	-	-
	TN 16EL130ZZ		●							1.30	1.60	-	-	-	-
	TN 16EL160ZZ		●							1.60	1.85	-	-	-	-
	TN 16EL185ZZ		●							1.85	1.85	-	-	-	-
	TN 16EL215ZZ		●							2.15	2.05	-	-	-	-
	TN 16EL265ZZ		●							2.65	2.05	-	-	-	-

● 标准库存产品 / Stock Assortment　　○ 非标准库存产品 / Non-stock Assortment　　所有尺寸 / All dimensions [mm]

有关刀具 SER/L 这些刀片的信息，请参见第 139 页 / Tools SER/L for these inserts you can find on the page 139
刀垫 PE 16 ZZ 的使用是必需的 (第 310 页) / Application of shims PE 16 ZZ is necessary (on the page 310)

尺寸 a，带公差 / Dimension a in the tolerances $^{+0.10}_{+0.05}$ mm

TN 16NR/L ...ZZ DIN 471

INTERNAL / INTERNO

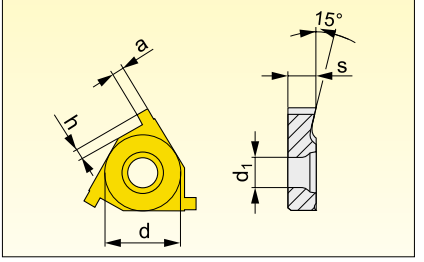

尺寸 Dimension	d	d_1	s		
16	9.525	3.90	3.40		

刀具 - 参见页码 / Tools - see page No.:141

断屑槽 Chip breaker	ISO	ANSI	材质等级 / Grades 8030							a	h	每转进给量 Feed per rev. f_{min}	f_{max}	切削深度 Cutting depth $a_{p\,min}$	$a_{p\,max}$
	TN 16NR110ZZ		●							1.10	1.30	-	-	-	-
	TN 16NR130ZZ		●							1.30	1.60	-	-	-	-
	TN 16NR160ZZ		●							1.60	1.85	-	-	-	-
	TN 16NR185ZZ		●							1.85	1.85	-	-	-	-
	TN 16NR215ZZ		●							2.15	2.05	-	-	-	-
	TN 16NR265ZZ		●							2.65	2.05	-	-	-	-
	TN 16NL110ZZ		○							1.10	1.30	-	-	-	-
	TN 16NL130ZZ		●							1.30	1.60	-	-	-	-
	TN 16NL160ZZ		●							1.60	1.85	-	-	-	-
	TN 16NL185ZZ		○							1.85	1.85	-	-	-	-
	TN 16NL215ZZ		●							2.15	2.05	-	-	-	-
	TN 16NL265ZZ		●							2.65	2.05	-	-	-	-

● 标准库存产品 / Stock Assortment　　○ 非标准库存产品 / Non-stock Assortment　　所有尺寸 / All dimensions [mm]

有关刀具 SER/L 这些刀片的信息，请参见第 139 页 / Tools SER/L for these inserts you can find on the page 141
刀垫 PE 16 ZZ 的使用是必需的 (第 310 页) / Application of shims PE 16 ZZ is necessary (on the page 310)

尺寸 a，带公差 / Dimension a in the tolerances $^{+0.10}_{+0.05}$ mm

PRAMET

1	2	3		4
刀片形状 Insert shape	后角 Clearance angle	切削刃长度 / Cutting edge lenght		外圆 / External 内孔 / Internal
		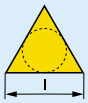	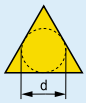	外圆 / External
				E
		11	11,0	内孔 / Internal
		16	9,525	
T	N	22	12,7	N

1	2	3	4	5	6	7		8
T	N	16	E	R	175	M	-	S

5
切削方向 Direction of cut
右手 / Right
R
左手 / Left
L
中置 / Neutral
N

6	
螺距 / Thread pitch	
螺距 Thread pitch	每英寸螺距数 No. Of pitches per inch
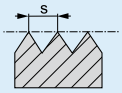 s x 100	每英寸螺距数 No. Of pitches per inch x 10 每英寸螺距数 No. Of pitches per inch x 10

7			
螺纹牙型 / Thread profile			
M	公制 60° Metric 60° ISO 965/1-1980	TR	TR 30° ISO 2901/3-1977
W	惠氏螺纹 55° Whitworth 55° ISO 228-1982	UN	美国 60° American 60° ISO 5864-1978
RD	圆形 30° Round 30° DIN 405-1981	ACME	ACME 29° ANSI B1.5-1988
API RD	API		

8	
断屑槽 Chip breaker	
P1	已按下 Pressed
S	特殊规格 Special

M

TN 16ER/EL...M

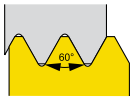

207

TN 16NR/NL...M

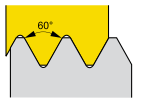

209

TN 16ER/NR...-...M

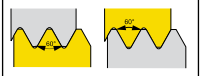

211

TN 22EN/NN...-...M

212

W

TN 16ER/EL...W

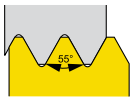

213

TN 16NR/NL...W

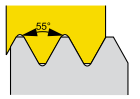

214

RD

TN 16ER/EL...RD

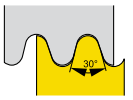

216

TN 16NR/NL...RD

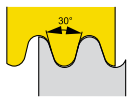

216

API

TN 16ER/EL...API

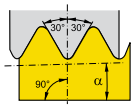

217

TN 16NR/NL...API

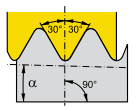

217

TR

TN ..ER/EL...TR

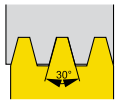

218

TN ..NR/NL...TR

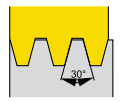

219

TN ..EN/NN...TR

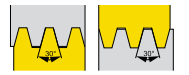

220

UN

TN ..ER/EL...UN

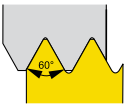

221

TN ..NR/NL...UN

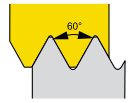

223

ACME

TN ..ER/EL...ACME

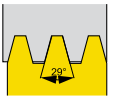

225

TN ..NR/NL...ACME

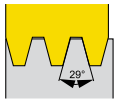

225

公制 / METRIC 60°

ISO 965/1-1980

全牙型 / FULL PROFILE

外圆 / EXTERNAL

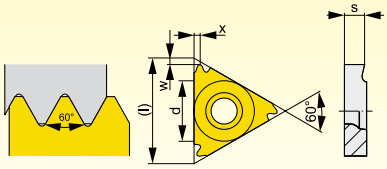

尺寸 Dimension	(l)	d	s		
16	16.5	9.525	3.47		
22	22.0	12.700	4.71		

刀具 - 参见页码 / Tools - see page No.: 139

断屑槽 Chip breaker	ISO	螺距 Thread pitch	材质等级 / Grades 8030							x	w	每转进给量 Feed per rev. f_{min}	f_{max}	切削深度 Cutting depth $a_{p\,min}$	$a_{p\,max}$
	TN 16ER050M	0.5	●							0.50	1.30	-	-	-	-
	TN 16ER075M	0.75	●							0.50	1.30	-	-	-	-
	TN 16ER080M	0.8	●							0.50	1.30	-	-	-	-
	TN 16ER100M	1	●							0.70	1.30	-	-	-	-
	TN 16ER125M	1.25	●							0.80	1.30	-	-	-	-
	TN 16ER150M	1.5	●							1.00	1.30	-	-	-	-
	TN 16ER175M	1.75	●							1.40	1.30	-	-	-	-
	TN 16ER200M	2	●							1.40	1.30	-	-	-	-
	TN 16ER250M	2.5	●							1.40	1.30	-	-	-	-
	TN 16ER300M	3	●							1.50	1.60	-	-	-	-
	TN 22ER350M	3.5	●							2.30	1.60	-	-	-	-
	TN 22ER400M	4	●							2.30	1.60	-	-	-	-
	TN 22ER450M	4.5	●							2.40	1.60	-	-	-	-
	TN 22ER500M	5	●							2.50	1.80	-	-	-	-
	TN 16EL050M	0.5	○							0.50	1.30	-	-	-	-
	TN 16EL075M	0.75	○							0.50	1.30	-	-	-	-
	TN 16EL080M	0.8	○							0.50	1.30				
	TN 16EL100M	1	●							0.70	1.30	-	-	-	-
	TN 16EL125M	1.25	●							0.80	1.30	-	-	-	-
	TN 16EL150M	1.5	●							1.00	1.30	-	-	-	-
	TN 16EL175M	1.75	●							1.40	1.30	-	-	-	-
	TN 16EL200M	2	●							1.40	1.30	-	-	-	-
	TN 16EL250M	2.5	●							1.40	1.30	-	-	-	-
	TN 16EL300M	3	●							1.50	1.60	-	-	-	-
	TN 22EL350M	3.5	●							2.30	1.60	-	-	-	-
	TN 22EL400M	4	●							2.30	1.60	-	-	-	-
	TN 22EL450M	4.5	○							2.40	1.60	-	-	-	-
	TN 22EL500M	5	○							2.50	1.80	-	-	-	-

● 标准库存产品 / Stock Assortment ○ 非标准库存产品 / Non-stock Assortment

所有尺寸 / All dimensions [mm]

可转位刀片，用于螺纹加工
INDEXABLE CUTTING INSERTS FOR THREADING

断屑槽 Chip breaker	ISO	螺距 Thread pitch	材质等级 / Grades								x	w	每转进给量 Feed per rev.		切削深度 Cutting depth	
			8030										f_{min}	f_{max}	$a_{p\,min}$	$a_{p\,max}$
	TN 16ER100M-P1	1	●								0.80	0.80	-	-	-	-
	TN 16ER125M-P1	1.25	●								0.80	0.80	-	-	-	-
	TN 16ER150M-P1	1.5	●								0.80	0.80	-	-	-	-
	TN 16ER175M-P1	1.75	●								1.50	1.20	-	-	-	-
	TN 16ER200M-P1	2	●								1.50	1.20	-	-	-	-
	TN 16ER250M-P1	2.5	●								1.50	1.20	-	-	-	-
	TN 16ER300M-P1	3	●								1.50	1.20	-	-	-	-

● 标准库存产品 / Stock Assortment　　○ 非标准库存产品 / Non-stock Assortment　　所有尺寸 / All dimensions [mm]

PRAMET

公制 / METRIC 60°

ISO 965/1-1980

全牙型 / FULL PROFILE

内孔 / INTERNAL

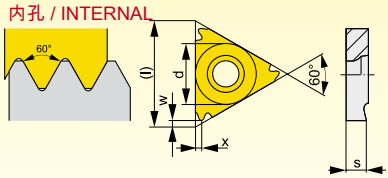

尺寸 Dimension	(l)	d	s		
11	11.0	6.350	3.00		
16	16.5	9.525	3.47		
22	22.0	12.700	4.71		

刀具 - 参见页码 / Tools - see page No.: 141

断屑槽 Chip breaker	ISO	螺距 Thread pitch	材质等级 / Grades							x	w	每转进给量 Feed per rev.		切削深度 Cutting depth	
			8030									f_{min}	f_{max}	$a_{p\,min}$	$a_{p\,max}$
	TN 11NR050M	0.50	●							0.50	1.30	-	-	-	-
	TN 11NR075M	0.75	●							0.50	1.30	-	-	-	-
	TN 11NR100M	1.00	●							0.70	1.30	-	-	-	-
	TN 11NR125M	1.25	●							0.80	1.30	-	-	-	-
	TN 11NR150M	1.50	●							1.00	1.30	-	-	-	-
	TN 11NR200M	2.00	●							1.00	1.30	-	-	-	-
	TN 16NR050M	0.50	●							0.50	1.30	-	-	-	-
	TN 16NR075M	0.75	●							0.50	1.30	-	-	-	-
	TN 16NR100M	1.00	●							0.70	1.30	-	-	-	-
	TN 16NR125M	1.25	●							0.80	1.30	-	-	-	-
	TN 16NR150M	1.50	●							1.00	1.30	-	-	-	-
	TN 16NR175M	1.75	●							1.40	1.30	-	-	-	-
	TN 16NR200M	2.00	●							1.40	1.30	-	-	-	-
	TN 16NR250M	2.50	●							1.40	1.30	-	-	-	-
	TN 16NR300M	3.00	●							1.50	1.30	-	-	-	-
	TN 22NR350M	3.50	●							2.30	1.60	-	-	-	-
	TN 22NR400M	4.00	●							2.30	1.60	-	-	-	-
	TN 22NR450M	4.50	●							2.40	1.60	-	-	-	-
	TN 22NR500M	5.00	●							2.50	1.80	-	-	-	-
	TN 11NL050M	0.50	○							0.50	1.30	-	-	-	-
	TN 11NL075M	0.75	○							0.50	1.30	-	-	-	-
	TN 11NL100M	1.00	●							0.70	1.30	-	-	-	-
	TN 11NL125M	1.25	●							0.80	1.30	-	-	-	-
	TN 11NL150M	1.50	●							1.00	1.30	-	-	-	-
	TN 11NL200M	2.00	○							1.00	1.30	-	-	-	-
	TN 16NL050M	0.50	○							0.50	1.30	-	-	-	-
	TN 16NL075M	0.75	○							0.50	1.30	-	-	-	-
	TN 16NL100M	1.00	●							0.70	1.30	-	-	-	-
	TN 16NL125M	1.25	●							0.80	1.30	-	-	-	-
	TN 16NL150M	1.50	●							1.00	1.30	-	-	-	-
	TN 16NL175M	1.75	●							1.40	1.30	-	-	-	-

● 标准库存产品 / Stock Assortment　　○ 非标准库存产品 / Non-stock Assortment

所有尺寸 / All dimensions [mm]

可转位刀片，用于螺纹加工
INDEXABLE CUTTING INSERTS FOR THREADING

断屑槽 Chip breaker	ISO	螺距 Thread pitch	材质等级 / Grades								x	w	每转进给量 Feed per rev.		切削深度 Cutting depth	
			8030										f_{min}	f_{max}	$a_{p\,min}$	$a_{p\,max}$
	TN 16NL200M	2.00	●								1.40	1.30	-	-	-	-
	TN 16NL250M	2.50	●								1.40	1.30	-	-	-	-
	TN 16NL300M	3.00	●								1.50	1.30	-	-	-	-
	TN 22NL350M	3.50	○								2.30	1.60	-	-	-	-
	TN 22NL400M	4.00	○								2.30	1.60	-	-	-	-
	TN 22NL500M	5.00	○								2.50	1.80	-	-	-	-
	TN 11NR100M-P1	1.00	●								0.80	0.80	-	-	-	-
	TN 11NR150M-P1	1.50	●								0.80	0.80	-	-	-	-
	TN 16NR100M-P1	1.00	○								0.80	0.80	-	-	-	-
	TN 16NR150M-P1	1.50	●								0.80	0.80	-	-	-	-
	TN 16NR200M-P1	2.00	●								1.50	1.20	-	-	-	-
	TN 16NR250M-P1	2.50	○								1.50	1.20	-	-	-	-
	TN 16NR300M-P1	3.00	●								1.50	1.20	-	-	-	-
	TN 16NR150M-S	1.50	●								1.00	1.30	-	-	-	-
	TN 16NR200M-S	2.00	○								1.40	1.30	-	-	-	-
	TN 16NR250M-S	2.50	○								1.40	1.30	-	-	-	-
	TN 16NL150M-S	1.50	○								1.00	1.30	-	-	-	-
	TN 16NL200M-S	2.00	○								1.40	1.30	-	-	-	-
	TN 16NL250M-S	2.50	○								1.40	1.30	-	-	-	-

● 标准库存产品 / Stock Assortment　　○ 非标准库存产品 / Non-stock Assortment　　所有尺寸 / All dimensions [mm]

PRAMET

公制 / METRIC 60°

非全牙型 / PARTIAL PROFILE

外圆 / EXTERNAL

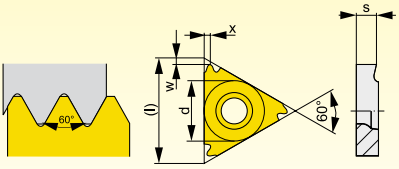

尺寸 Dimension	(l)	d	s		
16	16.5	9.525	3.47		

刀具 - 参见页码 / Tools - see page No.: 139

断屑槽 Chip breaker	ISO	螺距 Thread pitch	材质等级 / Grades							x	w	每转进给量 Feed per rev.		切削深度 Cutting depth	
			8030									f_{min}	f_{max}	$a_{p\,min}$	$a_{p\,max}$
	TN 16ER050-150M	0.50 - 1.50	●							1.00	1.00	-	-	-	-
	TN 16ER150-300M	1.50 - 3.00	●							1.50	1.00	-	-	-	-

公制 / METRIC 60°

非全牙型 / PARTIAL PROFILE

内孔 / INTERNAL

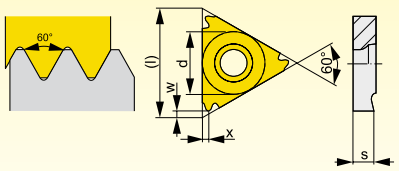

尺寸 Dimension	(l)	d	s		
16	16.5	9.525	3.47		

刀具 - 参见页码 / Tools - see page No.: 141

断屑槽 Chip breaker	ISO	螺距 Thread pitch	材质等级 / Grades							x	w	每转进给量 Feed per rev.		切削深度 Cutting depth	
			8030									f_{min}	f_{max}	$a_{p\,min}$	$a_{p\,max}$
	TN 16NR050-150M	0.50 - 1.50	●							1.00	1.00	-	-	-	-
	TN 16NR150-300M	1.50 - 3.00	●							1.50	1.00	-	-	-	-

● 标准库存产品 / Stock Assortment ○ 非标准库存产品 / Non-stock Assortment

所有尺寸 / All dimensions [mm]

公制 / METRIC 60° - S

非全牙型 / PARTIAL PROFILE

外圆 / EXTERNAL

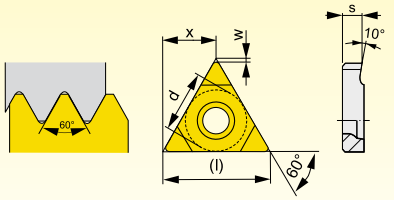

尺寸 Dimension	(l)	d	s		
22	22.0	12.700	4.60		

刀具 - 参见页码 / Tools - see page No.: 140

断屑槽 Chip breaker	ISO	螺距 Thread pitch	材质等级 / Grades							x	w	每转进给量 Feed per rev.		切削深度 Cutting depth	
			8030									f_{min}	f_{max}	$a_{p\,min}$	$a_{p\,max}$
	TN 22EN350-500M	3.50 - 5.00	●							11.00	0.75	-	-	-	-
	TN 22EN550-800M	5.50 - 8.00	●							11.00	1.25	-	-	-	-

公制 / METRIC 60° - S

非全牙型 / PARTIAL PROFILE

内孔 / INTERNAL

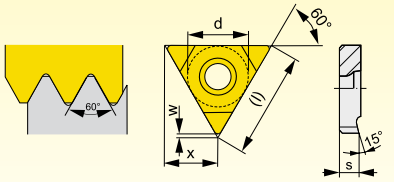

尺寸 Dimension	(l)	d	s		
22	22.0	12.700	4.60		

刀具 - 参见页码 / Tools - see page No.: 142

断屑槽 Chip breaker	ISO	螺距 Thread pitch	材质等级 / Grades							x	w	每转进给量 Feed per rev.		切削深度 Cutting depth	
			8030									f_{min}	f_{max}	$a_{p\,min}$	$a_{p\,max}$
	TN 22NN350-500M	3.50 - 5.00	●							11.00	0.65	-	-	-	-
	TN 22NN550-800M	5.50 - 8.00	●							11.00	0.95	-	-	-	-

● 标准库存产品 / Stock Assortment　　○ 非标准库存产品 / Non-stock Assortment　　所有尺寸 / All dimensions [mm]

惠氏螺纹 / WHITWORTH 55° ISO 228-1982
全牙型 / FULL PROFILE
外圆 / EXTERNAL

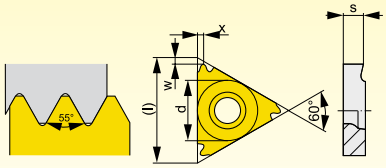

尺寸 Dimension	(l)	d	s		
16	16.5	9.525	3.47		
22	22.0	12.700	4.71		

刀具 - 参见页码 / Tools - see page No.:139

断屑槽 Chip breaker	ISO	每英寸螺距数 Number of pitches per inch	材质等级 / Grades							x	w	每转进给量 Feed per rev.		切削深度 Cutting depth	
			8030									f_{min}	f_{max}	$a_{p\,min}$	$a_{p\,max}$
	TN 16ER280W	28	●							0.70	0.60	-	-	-	-
	TN 16ER200W	20	●							0.90	0.80	-	-	-	-
	TN 16ER190W	19	●							1.00	0.80	-	-	-	-
	TN 16ER180W	18	●							1.00	0.80	-	-	-	-
	TN 16ER160W	16	●							1.10	0.90	-	-	-	-
	TN 16ER140W	14	●							1.20	1.00	-	-	-	-
	TN 16ER120W	12	●							1.40	1.10	-	-	-	-
	TN 16ER110W	11	●							1.50	1.10	-	-	-	-
	TN 16ER100W	10	●							1.50	1.20	-	-	-	-
	TN 16ER090W	9	●							1.70	1.20	-	-	-	-
	TN 16ER080W	8	●							1.50	1.20	-	-	-	-
	TN 22ER070W	7	○							2.30	1.60	-	-	-	-
	TN 22ER060W	6	○							2.30	1.60	-	-	-	-
	TN 22ER050W	5	○							2.40	1.70	-	-	-	-
	TN 16EL280W	28	○							0.70	0.60	-	-	-	-
	TN 16EL200W	20	○							0.90	0.80	-	-	-	-
	TN 16EL190W	19	○							1.00	0.80	-	-	-	-
	TN 16EL160W	16	○							1.10	0.90	-	-	-	-
	TN 16EL140W	14	●							1.20	1.00	-	-	-	-
	TN 16EL120W	12	○							1.40	1.10	-	-	-	-
	TN 16EL110W	11	●							1.50	1.10	-	-	-	-
	TN 16EL100W	10	○							1.50	1.10	-	-	-	-
	TN 16EL090W	9	○							1.70	1.20	-	-	-	-
	TN 16EL080W	8	○							1.50	1.20	-	-	-	-
	TN 22EL070W	7	○							2.30	1.60	-	-	-	-
	TN 22EL060W	6	○							2.30	1.60	-	-	-	-
	TN 22EL050W	5	○							2.40	1.70	-	-	-	-
	TN 16ER190W-P1	19	○							0.80	0.80	-	-	-	-
	TN 16ER140W-P1	14	●							1.50	1.20	-	-	-	-
	TN 16ER110W-P1	11	●							1.50	1.20	-	-	-	-

● 标准库存产品 / Stock Assortment　　○ 非标准库存产品 / Non-stock Assortment　　所有尺寸 / All dimensions [mm]

可转位刀片，用于螺纹加工
INDEXABLE CUTTING INSERTS FOR THREADING

惠氏螺纹 / WHITWORTH 55° ISO 228-1982
全牙型 / FULL PROFILE
内孔 / INTERNAL

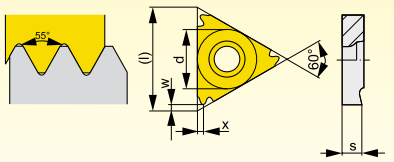

尺寸 Dimension	(l)	d	s		
11	11.0	6.350	3.00		
16	16.5	9.525	3.47		
22	22.0	12.700	4.71		

刀具 - 参见页码 / Tools - see page No.: 141

断屑槽 Chip breaker	ISO	每英寸螺距数 Number of pitches per inch	材质等级 / Grades							x	w	每转进给量 Feed per rev.		切削深度 Cutting depth	
			8030									f_{min}	f_{max}	$a_{p\,min}$	$a_{p\,max}$
	TN 11NR190W	19	●							1.00	0.80	-	-	-	-
	TN 11NR140W	14	●							1.20	0.80	-	-	-	-
	TN 16NR280W	28	○							0.70	0.60	-	-	-	-
	TN 16NR200W	20	○							0.90	0.80	-	-	-	-
	TN 16NR190W	19	●							1.00	0.80	-	-	-	-
	TN 16NR160W	16	●							1.10	0.90	-	-	-	-
	TN 16NR140W	14	●							1.20	1.00	-	-	-	-
	TN 16NR120W	12	○							1.40	1.10	-	-	-	-
	TN 16NR110W	11	●							1.50	1.10	-	-	-	-
	TN 16NR100W	10	●							1.50	1.20	-	-	-	-
	TN 16NR090W	9	○							1.70	1.20	-	-	-	-
	TN 16NR080W	8	●							1.50	1.20	-	-	-	-
	TN 22NR070W	7	○							2.30	1.60	-	-	-	-
	TN 22NR060W	6	○							2.30	1.60	-	-	-	-
	TN 22NR050W	5	○							2.40	1.70	-	-	-	-
	TN 11NL190W	19	○							1.00	0.80	-	-	-	-
	TN 11NL140W	14	○							1.20	0.80	-	-	-	-
	TN 16NL280W	28	○							0.70	0.60	-	-	-	-
	TN 16NL200W	20	○							0.90	0.80	-	-	-	-
	TN 16NL190W	19	○							1.00	0.80	-	-	-	-
	TN 16NL160W	16	○							1.10	0.90	-	-	-	-
	TN 16NL140W	14	●							1.20	1.00	-	-	-	-
	TN 16NL120W	12	○							1.40	1.10	-	-	-	-
	TN 16NL110W	11	●							1.50	1.10	-	-	-	-
	TN 16NL100W	10	○							1.50	1.10	-	-	-	-
	TN 16NL090W	9	○							1.70	1.20	-	-	-	-
	TN 16NL080W	8	○							1.50	1.20	-	-	-	-
	TN 22NL070W	7	○							2.30	1.60	-	-	-	-
	TN 22NL060W	6	○							2.30	1.60	-	-	-	-
	TN 22NL050W	5	○							2.40	1.70	-	-	-	-

● 标准库存产品 / Stock Assortment　　○ 非标准库存产品 / Non-stock Assortment

所有尺寸 / All dimensions [mm]

PRAMET

断屑槽 Chip breaker	ISO	每英寸螺距数 Number of pitches per inch	材质等级 / Grades							x	w	每转进给量 Feed per rev.		切削深度 Cutting depth	
			8030									f_{min}	f_{max}	$a_{p\,min}$	$a_{p\,max}$
	TN 11NR190W-P1	19	○							0.80	0.80	-	-	-	-
	TN 11NR140W-P1	14	○							0.90	0.70	-	-	-	-
	TN 16NR140W-P1	14	●							1.50	1.20	-	-	-	-
	TN 16NR110W-P1	11	●							1.50	1.20	-	-	-	-

● 标准库存产品 / Stock Assortiment　　○ 非标准库存产品 / Non-stock Assortiment　　所有尺寸 / All dimensions [mm]

可转位刀片，用于螺纹加工
INDEXABLE CUTTING INSERTS FOR THREADING

RD 30° DIN 405-1981
全牙型 / FULL PROFILE
外圆 / EXTERNAL

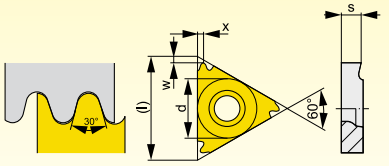

尺寸 Dimension	(l)	d	s		
16	16.5	9.525	3.47		
22	22.0	12.700	4.71		

刀具 - 参见页码 / Tools - see page No.: 139

断屑槽 Chip breaker	ISO	每英寸螺距数 Number of pitches per inch	材质等级 / Grades 8030							x	w	每转进给量 Feed per rev. f_{min}	f_{max}	切削深度 Cutting depth $a_{p\,min}$	$a_{p\,max}$
	TN 16ER100RD	10	○							1.20	1.10	-	-	-	-
	TN 16ER080RD	8	●							1.30	1.40	-	-	-	-
	TN 16ER060RD	6	●							1.70	1.50	-	-	-	-
	TN 22ER060RD	6	○							2.50	2.00	-	-	-	-
	TN 22EL060RD	6	○							2.50	2.00	-	-	-	-

RD 30° DIN 405-1981
全牙型 / FULL PROFILE
内孔 / INTERNAL

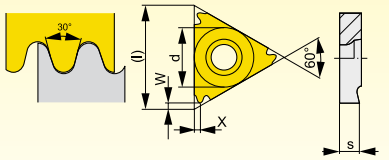

尺寸 Dimension	(l)	d	s		
16	16.5	9.525	3.47		
22	22.0	12.700	4.71		

刀具 - 参见页码 / Tools - see page No.: 141

断屑槽 Chip breaker	ISO	每英寸螺距数 Number of pitches per inch	材质等级 / Grades 8030							x	w	每转进给量 Feed per rev. f_{min}	f_{max}	切削深度 Cutting depth $a_{p\,min}$	$a_{p\,max}$
	TN 16NR100RD	10	○							1.20	1.10	-	-	-	-
	TN 16NR080RD	8	●							1.30	1.40	-	-	-	-
	TN 16NR060RD	6	●							1.70	1.40	-	-	-	-
	TN 22NR060RD	6	○							2.50	2.00	-	-	-	-
	TN 22NL060RD	6	○							2.50	2.00	-	-	-	-

● 标准库存产品 / Stock Assortiment　　○ 非标准库存产品 / Non-stock Assortiment　　所有尺寸 / All dimensions [mm]

PRAMET

API
全牙型 / FULL PROFILE
外圆 / EXTERNAL

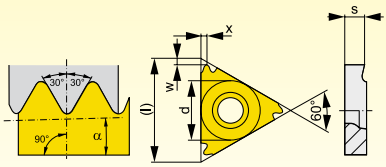

尺寸 Dimension	(l)	d	s	α	
16	16.5	9.525	3.47	1°47´	
22	22.0	12.700	4.71	4°46´	

刀具 - 参见页码 / Tools - see page No.: 139

断屑槽 Chip breaker	ISO	每英寸螺距数 Number of pitches per inch	材质等级 / Grades								x	w	每转进给量 Feed per rev.		切削深度 Cutting depth	
			8030										f_{min}	f_{max}	$a_{p\,min}$	$a_{p\,max}$
	TN 16ER100API-RD01	10	●								1.5	1.1	-	-	-	-
	TN 16ER080API-RD01	8	●								1.7	1.2	-	-	-	-
	TN 22ER040API038-402	4	●								2.6	1.7	-	-	-	-
	TN 22EL040API038-402	4	●								2.6	1.7	-	-	-	-

API
全牙型 / FULL PROFILE
内孔 / INTERNAL

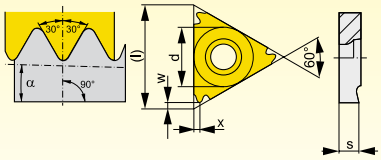

尺寸 Dimension	(l)	d	s	α	
16	16.5	9.525	3.47	1°47´	
22	22.0	12.700	4.71	4°46´	

刀具 - 参见页码 / Tools - see page No.: 141

断屑槽 Chip breaker	ISO	每英寸螺距数 Number of pitches per inch	材质等级 / Grades								x	w	每转进给量 Feed per rev.		切削深度 Cutting depth	
			8030										f_{min}	f_{max}	$a_{p\,min}$	$a_{p\,max}$
	TN 16NR100API-RD01	10	●								1.5	1.1	-	-	-	-
	TN 16NR080API-RD01	8	●								1.7	1.2	-	-	-	-
	TN 22NR040API038-402	4	●								2.6	1.7	-	-	-	-
	TN 22NL040API038-402	4	●								2.6	1.7	-	-	-	-

● 标准库存产品 / Stock Assortment　　○ 非标准库存产品 / Non-stock Assortment　　所有尺寸 / All dimensions [mm]

可转位刀片，用于螺纹加工
INDEXABLE CUTTING INSERTS FOR THREADING

TR 30° DIN 103-1977. ISO 2901/3-1977
全牙型 / FULL PROFILE
外圆 / EXTERNAL

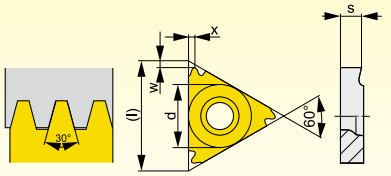

尺寸 Dimension	(l)	d	s		
16	16.5	9.525	3.47		
22	22.0	12.700	4.71		

刀具 - 参见页码 / Tools - see page No.: 139

断屑槽 Chip breaker	ISO	螺距 Thread pitch	材质等级 / Grades 8030							x	w	每转进给量 Feed per rev. f_{min}	f_{max}	切削深度 Cutting depth $a_{p\,min}$	$a_{p\,max}$
	TN 16ER150TR	1.50	○							1.00	1.00	-	-	-	-
	TN 16ER200TR	2.00	●							1.40	1.30	-	-	-	-
	TN 16ER300TR	3.00	●							1.50	1.30	-	-	-	-
	TN 22ER400TR	4.00	●							2.30	1.65	-	-	-	-
	TN 22ER500TR	5.00	●							2.50	2.10	-	-	-	-
	TN 16EL150TR	1.50	○							1.00	1.00	-	-	-	-
	TN 16EL200TR	2.00	○							1.40	1.30	-	-	-	-
	TN 16EL300TR	3.00	●							1.50	1.30	-	-	-	-
	TN 22EL400TR	4.00	●							2.30	1.65	-	-	-	-
	TN 22EL500TR	5.00	○							2.50	2.10	-	-	-	-

● 标准库存产品 / Stock Assortment ○ 非标准库存产品 / Non-stock Assortment

所有尺寸 / All dimensions [mm]

PRAMET

TR 30° DIN 103-1977. ISO 2901/3-1977
全牙型 / FULL PROFILE
内孔 / INTERNAL

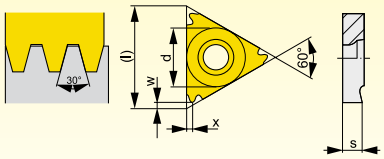

尺寸 Dimension	(l)	d	s		
16	16.5	9.525	3.47		
22	22.0	12.700	4.71		

刀具 - 参见页码 / Tools - see page No.: 141

断屑槽 Chip breaker	ISO	螺距 Thread pitch	材质等级 / Grades							x	w	每转进给量 Feed per rev.		切削深度 Cutting depth	
			8030									f_{min}	f_{max}	$a_{p\,min}$	$a_{p\,max}$
	TN 16NR150TR	1.50	○							1.00	1.00	-	-	-	-
	TN 16NR200TR	2.00	●							1.40	1.30	-	-	-	-
	TN 16NR300TR	3.00	●							1.50	1.30	-	-	-	-
	TN 22NR400TR	4.00	●							2.30	1.65	-	-	-	-
	TN 22NR500TR	5.00	●							2.50	2.10	-	-	-	-
	TN 16NL150TR	1.50	○							1.00	1.00	-	-	-	-
	TN 16NL200TR	2.00	○							1.40	1.30	-	-	-	-
	TN 16NL300TR	3.00	●							1.50	1.30	-	-	-	-
	TN 22NL400TR	4.00	○							2.30	1.65	-	-	-	-
	TN 22NL500TR	5.00	○							2.50	2.10	-	-	-	-

● 标准库存产品 / Stock Assortment ○ 非标准库存产品 / Non-stock Assortment

所有尺寸 / All dimensions [mm]

可转位刀片，用于螺纹加工
INDEXABLE CUTTING INSERTS FOR THREADING

TR 30° S
全牙型 / FULL PROFILE
外圆 / EXTERNAL

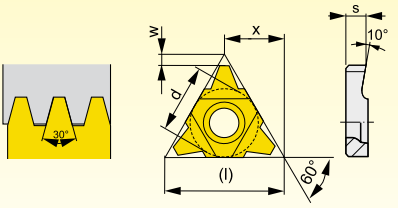

尺寸 Dimension	(l)	d	s		
22	22.0	12.700	4.60		

刀具 - 参见页码 / Tools - see page No.: 140

断屑槽 Chip breaker	ISO	螺距 Thread pitch	材质等级 / Grades							x	w	每转进给量 Feed per rev.		切削深度 Cutting depth	
			8030									f_{min}	f_{max}	$a_{p\,min}$	$a_{p\,max}$
	TN 22EN600TR	6.00	●							11.00	1.55	-	-	-	-
	TN 22EN700TR	7.00	○							11.00	1.85	-	-	-	-

TR 30° S
全牙型 / FULL PROFILE
内孔 / INTERNAL

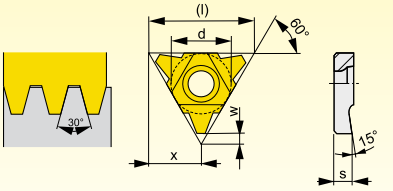

尺寸 Dimension	(l)	d	s		
22	22.0	12.700	4.60		

刀具 - 参见页码 / Tools - see page No.: 142

Chip breaker Quebra-cavaco	ISO	螺距 Thread pitch	材质等级 / Grades							x	w	每转进给量 Feed per rev.		切削深度 Cutting depth	
			8030									f_{min}	f_{max}	$a_{p\,min}$	$a_{p\,max}$
	TN 22NN600TR	6.00	●							11.00	1.55	-	-	-	-
	TN 22NN700TR	7.00	○							11.00	1.85	-	-	-	-

● 标准库存产品 / Stock Assortment ○ 非标准库存产品 / Non-stock Assortment

所有尺寸 / All dimensions [mm]

PRAMET

UN 60° / AMERICANA UN 60°
ISO 5864-1978. ANSI B1.1-1983
全牙型 / FULL PROFILE
外圆 / EXTERNAL

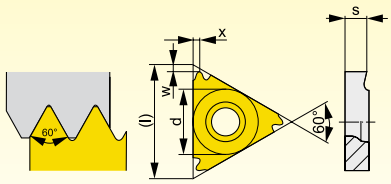

尺寸 Dimension	(l)	d	s		
16	16.5	9.525	3.47		
22	22.0	12.700	4.71		

刀具 - 参见页码 / Tools - see page No.: 139

断屑槽 Chip breaker	ISO	每英寸螺距数 Number of pitches per inch	材质等级 / Grades							x	w	每转进给量 Feed per rev.		切削深度 Cutting depth	
			8030									f_{min}	f_{max}	$a_{p\,min}$	$a_{p\,max}$
	TN 16ER320UN	32	○							0.60	0.60	-	-	-	-
	TN 16ER280UN	28	○							0.70	0.60	-	-	-	-
	TN 16ER240UN	24	●							0.80	0.70	-	-	-	-
	TN 16ER200UN	20	●							0.90	0.80	-	-	-	-
	TN 16ER180UN	18	●							1.00	0.80	-	-	-	-
	TN 16ER160UN	16	○							1.10	0.90	-	-	-	-
	TN 16ER140UN	14	●							1.20	1.00	-	-	-	-
	TN 16ER130UN	13	○							1.30	1.00	-	-	-	-
	TN 16ER120UN	12	●							1.40	1.10	-	-	-	-
	TN 16ER115UN	11.5	○							1.40	1.10	-	-	-	-
	TN 16ER110UN	11	○							1.50	1.10	-	-	-	-
	TN 16ER100UN	10	○							1.50	1.10	-	-	-	-
	TN 16ER090UN	9	○							1.70	1.20	-	-	-	-
	TN 16ER080UN	8	○							1.60	1.20	-	-	-	-
	TN 22ER070UN	7	○							2.30	1.60	-	-	-	-
	TN 22ER060UN	6	○							2.30	1.60	-	-	-	-
	TN 22ER050UN	5	○							2.50	1.70	-	-	-	-
	TN 16EL320UN	32	○							0.60	0.60	-	-	-	-
	TN 16EL280UN	28	○							0.70	0.60	-	-	-	-
	TN 16EL240UN	24	○							0.80	0.70	-	-	-	-
	TN 16EL200UN	20	○							0.90	0.80	-	-	-	-
	TN 16EL180UN	18	○							1.00	0.80	-	-	-	-
	TN 16EL160UN	16	○							1.10	0.90	-	-	-	-
	TN 16EL140UN	14	○							1.20	1.00	-	-	-	-
	TN 16EL120UN	12	○							1.30	1.10	-	-	-	-
	TN 16EL110UN	11	○							1.40	1.10	-	-	-	-
	TN 16EL100UN	10	○							1.50	1.10	-	-	-	-
	TN 16EL090UN	9	○							1.70	1.20	-	-	-	-
	TN 16EL080UN	8	○							1.60	1.20	-	-	-	-
	TN 22EL070UN	7	○							2.30	1.60	-	-	-	-
	TN 22EL060UN	6	○							2.30	1.60	-	-	-	-
	TN 22EL050UN	5	○							2.50	1.70	-	-	-	-

● 标准库存产品 / Stock Assortment　　○ 非标准库存产品 / Non-stock Assortment　　所有尺寸 / All dimensions [mm]

可转位刀片，用于螺纹加工
INDEXABLE CUTTING INSERTS FOR THREADING

断屑槽 Chip breaker	ISO	每英寸螺距数 Number of pitches per inch	材质等级 / Grades								x	w	每转进给量 Feed per rev.		切削深度 Cutting depth	
			8030										f_{min}	f_{max}	$a_{p\,min}$	$a_{p\,max}$
	TN 16ER200UN-P1	20	○								0.80	0.80	-	-	-	-
	TN 16ER180UN-P1	18	○								0.80	0.80	-	-	-	-
	TN 16ER160UN-P1	16	○								0.80	0.80	-	-	-	-
	TN 16ER140UN-P1	14	○								1.50	1.20	-	-	-	-
	TN 16ER120UN-P1	12	○								1.50	1.20	-	-	-	-
	TN 16ER080UN-P1	8	○								1.50	1.20	-	-	-	-

● 标准库存产品 / Stock Assortment　　○ 非标准库存产品 / Non-stock Assortment　　所有尺寸 / All dimensions [mm]

PRAMET

UN 60° / AMERICANA UN 60°
ISO 5864-1978. ANSI B1.1-1983
全牙型 / FULL PROFILE
内孔 / INTERNAL

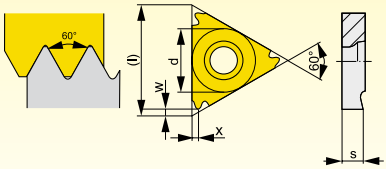

尺寸 Dimension	(l)	d	s		
16	16.5	9.525	3.47		
22	22.0	12.700	4.71		

刀具 - 参见页码 / Tools - see page No.: 141

断屑槽 Chip breaker	ISO	每英寸螺距数 Number of pitches per inch	材质等级 / Grades							x	w	每转进给量 Feed per rev.		切削深度 Cutting depth	
			8030									f_{min}	f_{max}	$a_{p\,min}$	$a_{p\,max}$
	TN 16NR320UN	32	○							0.60	0.60	-	-	-	-
	TN 16NR280UN	28	○							0.70	0.60	-	-	-	-
	TN 16NR240UN	24	○							0.80	0.70	-	-	-	-
	TN 16NR200UN	20	○							0.90	0.80	-	-	-	-
	TN 16NR180UN	18	○							1.00	0.80	-	-	-	-
	TN 16NR160UN	16	○							1.10	0.90	-	-	-	-
	TN 16NR140UN	14	●							1.20	1.00	-	-	-	-
	TN 16NR130UN	13	○							1.30	1.00	-	-	-	-
	TN 16NR120UN	12	●							1.40	1.10	-	-	-	-
	TN 16NR115UN	11.5	●							1.40	1.10	-	-	-	-
	TN 16NR110UN	11	○							1.50	1.10	-	-	-	-
	TN 16NR100UN	10	○							1.50	1.10	-	-	-	-
	TN 16NR080UN	8	○							1.50	1.20	-	-	-	-
	TN 22NR070UN	7	○							2.30	1.60	-	-	-	-
	TN 22NR060UN	6	○							2.30	1.60	-	-	-	-
	TN 22NR050UN	5	○							2.50	1.70	-	-	-	-
	TN 16NL320UN	32	○							0.60	0.60	-	-	-	-
	TN 16NL280UN	28	○							0.70	0.60	-	-	-	-
	TN 16NL240UN	24	○							0.80	0.70	-	-	-	-
	TN 16NL200UN	20	○							0.90	0.80	-	-	-	-
	TN 16NL180UN	18	○							1.00	0.80	-	-	-	-
	TN 16NL160UN	16	○							1.10	0.90	-	-	-	-
	TN 16NL140UN	14	○							1.20	1.00	-	-	-	-
	TN 16NL120UN	12	○							1.30	1.00	-	-	-	-
	TN 16NL110UN	11	○							1.40	1.10	-	-	-	-
	TN 16NL100UN	10	○							1.50	1.10	-	-	-	-
	TN 16NL080UN	8	○							1.60	1.20	-	-	-	-
	TN 22NL070UN	7	○							2.30	1.60	-	-	-	-
	TN 22NL060UN	6	○							2.30	1.60	-	-	-	-

● 标准库存产品 / Stock Assortment ○ 非标准库存产品 / Non-stock Assortment

所有尺寸 / All dimensions [mm]

可转位刀片，用于螺纹加工
INDEXABLE CUTTING INSERTS FOR THREADING

断屑槽 Chip breaker	ISO	每英寸螺距数 Number of pitches per inch	材质等级 / Grades								x	w	每转进给量 Feed per rev.		切削深度 Cutting depth	
			8030										f_{min}	f_{max}	$a_{p\,min}$	$a_{p\,max}$
	TN 16NR200UN-P1	20	○								0.80	0.80	-	-	-	-
	TN 16NR180UN-P1	18	○								0.80	0.80	-	-	-	-
	TN 16NR160UN-P1	16	○								0.80	0.80	-	-	-	-
	TN 16NR140UN-P1	14	○								1.50	1.20	-	-	-	-
	TN 16NR120UN-P1	12	○								1.50	1.20	-	-	-	-
	TN 16NR080UN-P1	8	○								1.50	1.20	-	-	-	-
	TN 16NR160UN-S	16	○								1.10	0.90				
	TN 16NR140UN-S	14	○								1.20	1.00				
	TN 16NR115UN-S	11.5	○								1.40	1.10				

● 标准库存产品 / Stock Assortiment　　○ 非标准库存产品 / Non-stock Assortiment　　所有尺寸 / All dimensions [mm]

PRAMET

ACME 29° ANSI B1.5-1988
全牙型 / FULL PROFILE
外圆 / EXTERNAL

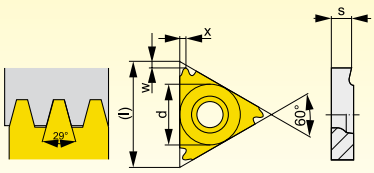

尺寸 Dimension	(l)	d	s		
16	16.5	9.525	3.47		
22	22.0	12.700	4.71		

刀具 - 参见页码 / Tools - see page No.: 139

断屑槽 Chip breaker	ISO	每英寸螺距数 Number of pitches per inch	材质等级 / Grades								x	w	每转进给量 Feed per rev.		切削深度 Cutting depth	
			8030										f_{min}	f_{max}	$a_{p\,min}$	$a_{p\,max}$
	TN 16ER120ACME	12	○								1.40	1.20	-	-	-	-
	TN 16ER100ACME	10	○								1.40	1.30	-	-	-	-
	TN 16ER080ACME	8	○								1.50	1.40	-	-	-	-
	TN 22ER060ACME	6	○								2.40	2.10	-	-	-	-
	TN 22ER050ACME	5	○								2.40	1.90	-	-	-	-
	TN 22EL060ACME	6	○								2.40	2.10	-	-	-	-
	TN 22EL050ACME	5	○								2.40	1.90	-	-	-	-

ACME 29° ANSI B1.5-1988
全牙型 / FULL PROFILE
内孔 / INTERNAL

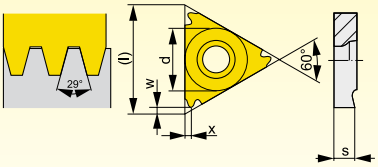

尺寸 Dimension	(l)	d	s		
16	16.5	9.525	3.47		
22	22.0	12.700	4.71		

刀具 - 参见页码 / Tools - see page No.: 141

断屑槽 Chip breaker	ISO	每英寸螺距数 Number of pitches per inch	材质等级 / Grades								x	w	每转进给量 Feed per rev.		切削深度 Cutting depth	
			8030										f_{min}	f_{max}	$a_{p\,min}$	$a_{p\,max}$
	TN 16NR080ACME	8	○								1.50	1.50	-	-	-	-
	TN 22NR060ACME	6	○								2.40	2.10	-	-	-	-
	TN 22NR050ACME	5	○								2.40	1.90	-	-	-	-
	TN 22NL050ACME	5	○								2.40	1.90	-	-	-	-

● 标准库存产品 / Stock Assortment　　○ 非标准库存产品 / Non-stock Assortment　　所有尺寸 / All dimensions [mm]

CNMA

227

DCMW

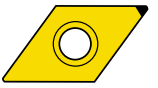

227

VCMW

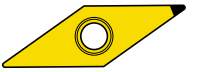

228

CNMA

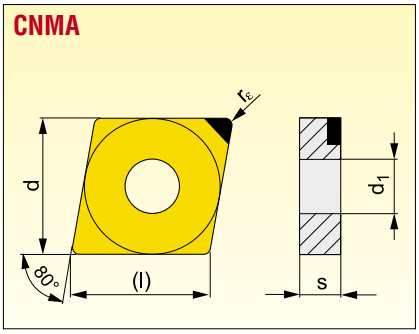

尺寸 Dimension	(l)	d	d_1	s	
1204	12.9	12.700	5.16	4.76	

刀具 - 参见页码 / Tools - see page No.: 17, 23, 30-32, 49, 57, 76, 77

断屑槽 Chip breaker	ISO	ANSI	材质等级 / Grades									半径 Radius	每转进给量 Feed per rev.		切削深度 Cutting depth	
			PB2									r_ε	f_{min}	f_{max}	$a_{p\,min}$	$a_{p\,max}$
	CNMA 120408FN	CNMA 432FN	●									0.8	0.10	0.60	0.8	2.0
	CNMA 120408TN	CNMA 432TN	●									0.8	0.10	0.60	0.8	2.0

DCMW

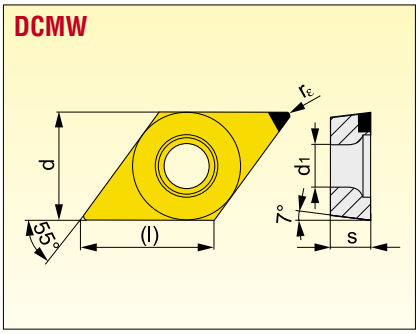

尺寸 Dimension	(l)	d	d_1	s	
11T3	11.6	9.525	4.40	3.97	

刀具 - 参见页码 / Tools - see page No.: 86, 87, 106-108

断屑槽 Chip breaker	ISO	ANSI	材质等级 / Grades									半径 Radius	每转进给量 Feed per rev.		切削深度 Cutting depth	
			PD1									r_ε	f_{min}	f_{max}	$a_{p\,min}$	$a_{p\,max}$
	DCMW 11T304FN	DCMW 3(2.5)1FN	●									0.4	0.05	0.18	0.4	2.0
	DCMW 11T308FN	DCMW 3(2.5)2FN	○									0.8	0.05	0.30	0.8	2.0

● 标准库存产品 / Stock Assortment ○ 非标准库存产品 / Non-stock Assortment 所有尺寸 / All dimensions [mm]

VCMW

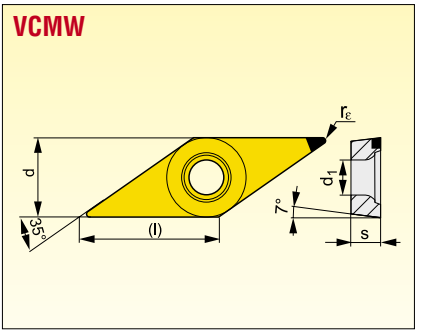

尺寸 Dimension	(l)	d	d_1	s	
1604	11.6	9.525	3.97	4.40	

刀具 - 参见页码 / Tools - see page No.: 95-99, 111, 112

断屑槽 Chip breaker	ISO	ANSI	材质等级 / Grades									半径 Radius	每转进给量 Feed per rev.		切削深度 Cutting depth	
			PD1									r_ε	f_{min}	f_{max}	$a_{p\,min}$	$a_{p\,max}$
	VCMW 160404FN	VCMW 331FN	●									0.4	0.10	0.14	0.4	2.0
	VCMW 160408FN	VCMW 332FN	●									0.8	0.10	0.14	0.8	2.0

● 标准库存产品 / Stock Assortiment ○ 非标准库存产品 / Non-stock Assortiment

所有尺寸 / All dimensions [mm]

技术部分

TECHNICAL PART

章节	Chapter	
机加工材料分类	Classification of machined materials	230
切削刀具选择	Choice of cutting tool	231 - 236
刀片槽型 - 车削	Geometry of inserts - turning	237 - 265
刀片槽型 - 重型粗加工	Geometry of inserts - heavy roughing	266 - 276
刀片类型	Type of cutting inserts	277 - 281
切削工况	Cutting conditions	282 - 296
磨损形式	Wear types	
- 磨损形式	- wear types	297 - 300
- 不良现象	- undesirable phenomena	301 - 303
下一信息	Next information	
- 切削参数计算公式	- formulae for calculation of cutting parameters	304 - 305
- 车刀的工作角度和结构角度	- working and constructional angles of turning tool	306 - 307
– 螺纹加工	- threading	308 - 318
- 切断、割槽、仿形车削	- parting, grooving, copying	319 - 321
- 车削细长轴，镗孔	- turning of slender shafts, boring	322 - 325
- 推荐螺钉扭矩	- recommended screw torques	326
- 计算器的应用	- application of disk calculator	327
- 刀片盒上的印刷信息	- information printed on inserts boxes	327
- 硬度换算表	- hardness conversion table	328

机加工材料分类
CLASSIFICATION OF MACHINED MATERIALS

要选择正确的切削刀具和切削工况解决方案，最重要的是确定机加工材料的类别。机加工材料按照 ISO 513 标准被分为 6 个基本组。相关的材料被分为一组，每组材料引起的切削刃负荷类型相同，因此磨损形式也类似。

所以，第一步要确定待加工的材料属于其中的哪一个材料组 - 参见表 1。

The identification of machined material is the most important hing for the right solution of cutting tool and cutting conditions. Machined materials are classified into 6 basic groups according to standard ISO 513. In each group are associated materials which cause the same load type of the cutting edge and thus also a similar wear type.

That is why the first step is to classify the material to be machined into one of the mentioned groups - see table No.1.

表 1 / Table No. 1

P	碳素钢 - 非合金 (GrA，Gr110，Gr1043) 碳素铸钢 (GrN-2) 碳素工具钢 (W5) 普通低合金钢 (X52) 合金钢 (N0.5115，Gr9840) 低合金和中合金钢 (Gr9260H) 合金工具钢 (GrA) 铁素体和马氏体耐腐蚀钢 ASTM A176-74 and cast steels (GrCB30)	Carbon steels - non-alloyed (GrA, Gr1108, Gr1043) Carbon cast steels (GrN-2) Carbon tool steels (W5) Low-alloyed steels (X52) Alloyed steels (N0.5115, Gr9840) Low and medium alloyed steels (Gr9260H) Alloyed tool steels (GrA) Ferritic and martensitic corrosion-resistant steels ASTM A176-74 and cast steels (GrCB30)
M	奥氏体和铁素体 - 奥氏体 耐腐蚀、耐热和耐蠕变钢，此外还有 非磁性和耐磨钢 (Gr302)	Austenitic and ferritic - austenitic Corrosion-resistant, heat-resistant and creep-resistant steels Furthermore Non-magnetic and abrasive-resistant steels (Gr302)
K	非合金和合金灰铸铁 (C1 358) 球墨铸铁 (Gr 80-55-06) 可锻铸铁 (6004)	Grey cast iron non-alloyed and alloyed (C1 358) Nodular cast iron (Gr 80-55-06) Malleable cast iron (6004)
N	有色金属 铝合金 铜合金	Non-ferrous metals Al alloys Cu alloys
S	特殊耐蠕变镍、钴、铁和钛基合金 NIMONIC 80A - ASTM A637 INCOLOY 800HT - UNS No 8811 INCONEL 617 - No 6617	Special creep-resistant Ni, Co, Fe and Ti based alloys NIMONIC 80A - ASTM A637 INCOLOY 800HT - UNS No 8811 INCONEL 617 - No 6617
H	热处理钢，硬度 HRC 48 - 60 淬硬钢，硬度 HRC 48 - 60 硬化锭模铸铁，硬度 HSh 55 - 85	Heat-treated steels with hardness 48 ÷ 60 HRC Hardened steels HRC 48 ÷ 60 Hardened ingot-mould iron with hardness 55 ÷ 85 HSh

选择刀柄的截面积.

刀柄截面积的选择受限于机床的能力。然而，如果能选择，我们指定了一个列线图，可以对应所用的切削工况 (进给量和切削深度) 和刀具悬伸进行最佳选择。

Choice of cross-section of the tool holder.

Choice of cross-section of tool holder is limited by the possibilities of the machine. However if you can make a choice we state a nomogram for the optimum choice with the respect to used cutting conditions (feed and depth of cut) and tool overhang.

图 1 / Picture No. 1

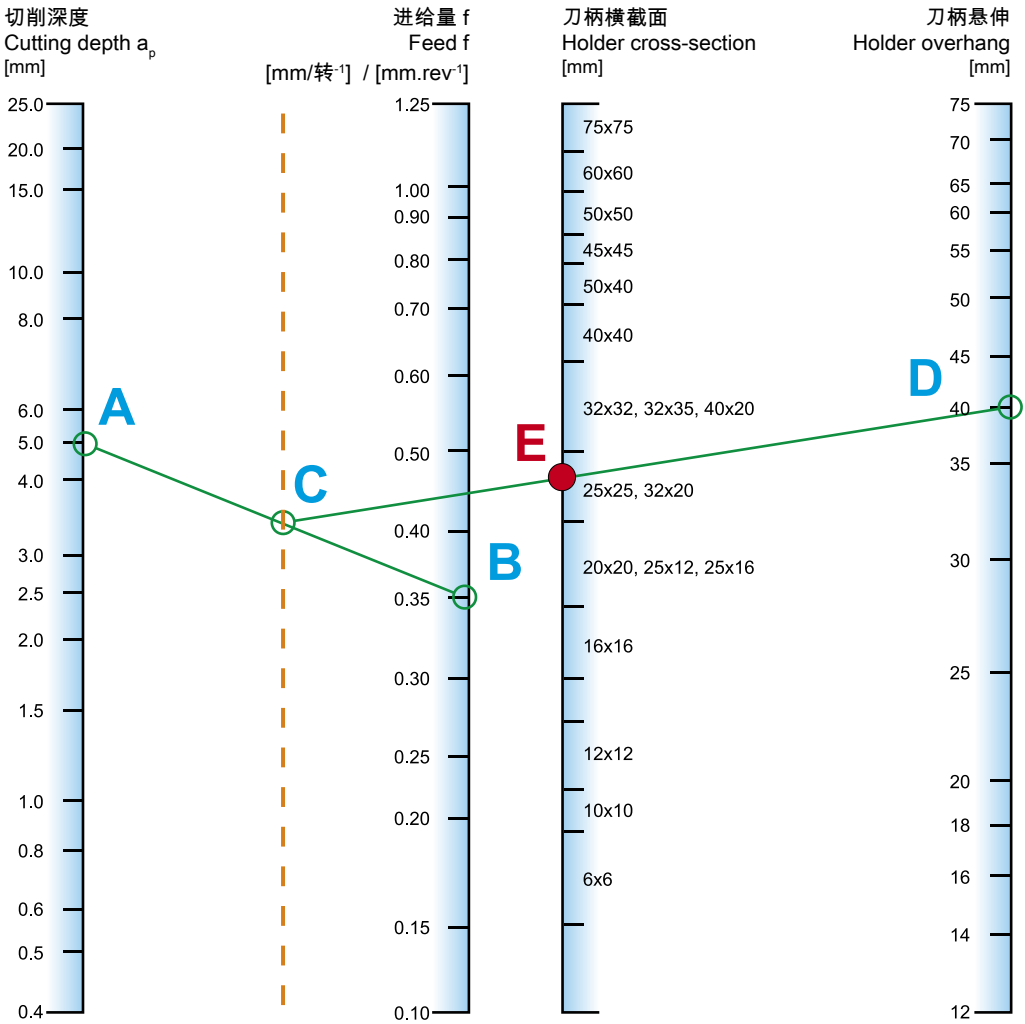

列线图应用示例：

在第一步，把选定的切深 (或最大切深) a_p (点 A) 与选定进给量 (或最大进给量) f (点 B) 连接起来。从中心垂线和 A 与 B 连线的交点 (点 C)，我们画一条至刀具悬伸点 (点 D) 的横线。在从右侧数第三条轴线上，找到刀柄的最佳横截面 (点 E)。

The example of nomogram application:

In the first step we connect chosen (or maximum) depth of cut $\mathbf{a_p}$ (point **A**) with chosen (or maximum) feed **f** (point **B**). From the point of intersection of the central straight line and connecting line of points A and B, (point **C**), we draw abscissa to the point of tool overhang (point **D**). On the second axis from the right we find the optimum cross-section of tool holder (point **E**).

选择刀片的形状和尺寸

Choice of the shape and dimension of cutting insert

表 3

Table No. 3

选择优先级 Priority of choice

刀尖支撑可达性增强和在可变主偏角上的应用范围扩大
The accessibility to supporting tip and range of application at variable setting angle is improved

耐塑性变形和断续切削的能力提高
Rises resistance against plastic deformation and interrupted cut

刀片形状 Insert shape	刀片规格 Insert size	切削刃最大切削长度 L_{max} [mm] Maximum length of cutting edge in cut L_{max} [mm]	
V	11	0.25L	2.8
	16		4.2
D	07	0.25L	2.0
	11		2.9
	15		3.9
K	16	0.25L	4.7
	19		4.7
T	11	0.33L	3.6
	16		5.5
	22		7.3
	27		9.1
W	06	0.50L	3.3
	08		4.4
C	06	0.66L	4.2
	09		6.4
	12		8.5
	16		10.6
	19		12.7
	25		16.5
S	09	0.66L	6.3
	12		8.4
	15		10.4
	19		12.6
	25		16.8
	38		25.0
R	06	0.40D	2.4
	08		3.2
	10		4.0
	12		4.8
	15		6.0
	16		6.4
	19		7.6
	20		8.0
	25		10.0
	32		12.8

选择可转位刀片的最佳厚度

为了选择可转位刀片的最佳厚度，可以使用简单的列线图 (图 2)。对于选定的进给量和切削深度，根据与中心轴 (斜轴) 的交点确定连续切削和断续切削的刀片厚度。我们选择最接近的较高厚度刀片。

Choice of optimum thickness of cutting indexable insert

For the choice of thickness of cutting indexable insert we can use simple nomogram (*Picture No. 2*). For the chosen feed and depth of cut we determine the thickness of insert for interrupted and continuous cut from the point of intersection on the central (oblique) axis. We choose the cutting insert with the nearest higher thickness.

图 2

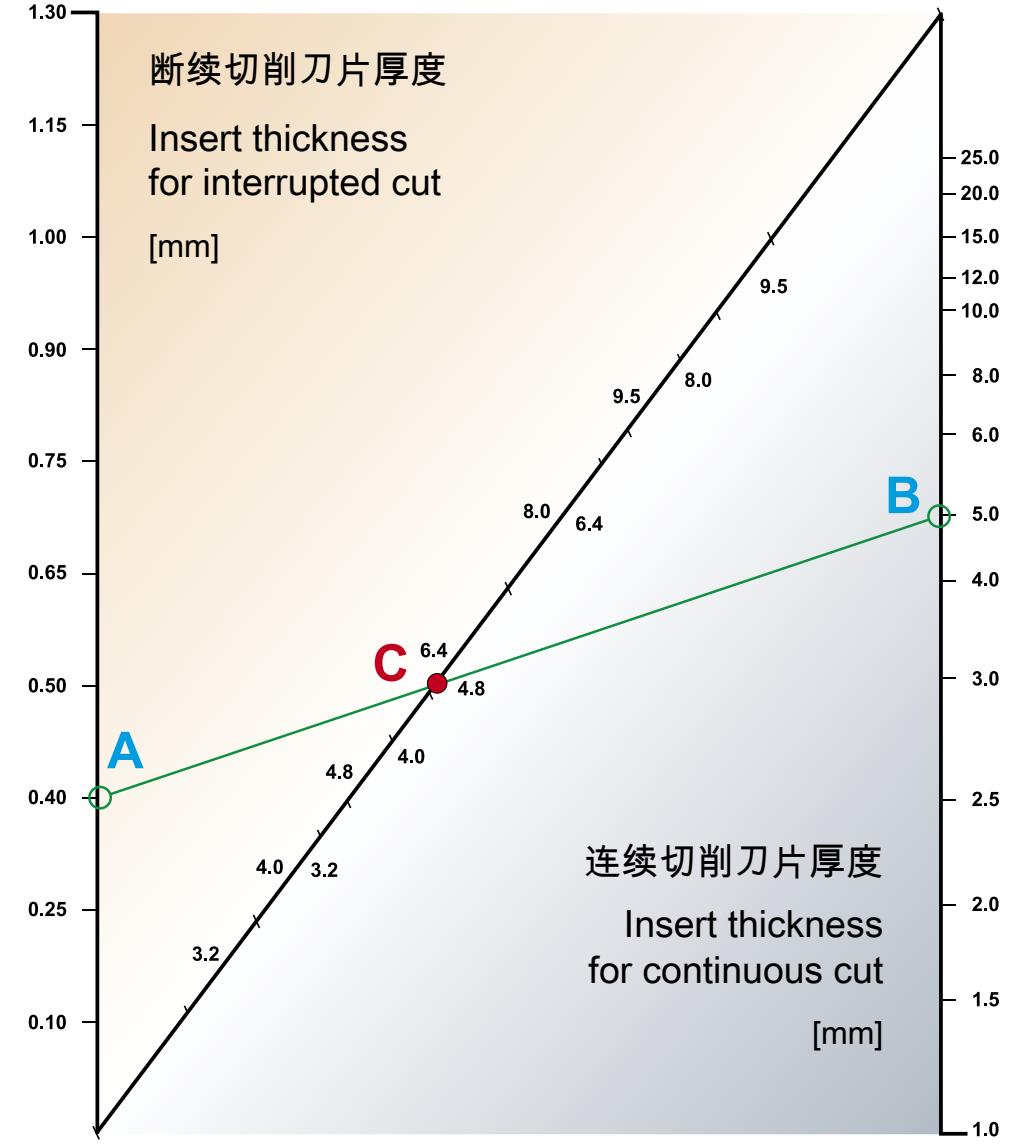

选择可转位刀片的刀尖圆弧半径

刀尖圆弧半径 r_ε (可转位刀片 ISO 代码中的最后两位数字) 应为最大可能数值。符合 ISO 标准的半径尺寸连同夹角 ε_r 受限于刀片形状，并对切削刃刀尖耐塑性变形的能力有影响。刀尖半径 r_ε 越大，耐塑性变形的能力越强 (由于超出切削牌号的热稳定性限制导致刀尖整个损坏)。较大的 r_ε ，可以使用较大的进给量，但需要机床、刀具和工件更稳定。如果稳定性低，则会由于使用较大半径 r_ε 的可转位刀片而产生振动危险。

可以使用下面的列线图选择刀尖半径 (图 3)：

The choice of nose radius of cutting indexable insert

Nose radius $\mathbf{r}_\varepsilon$ (the last two figures in ISO code of cutting indexable insert) should be the maximum as possible. Its dimension is together with the included angle according to ISO ε_r limited by the shape of insert and has influence on the resistance of the cutting edge against the plastic deformation of the corner. The bigger nose radius $\mathbf{r}_\varepsilon$ the better resistance against plastic deformation (a total destruction of the corner due to overrange of limit of the cutting grade thermal stability). Bigger $\mathbf{r}_\varepsilon$ allows usage of bigger feeds however needs more steady machine, tool and work piece. If the stability is low then arises the risk of vibrations during usage of cutting indexable inserts with bigger radius $\mathbf{r}_\varepsilon$.

For the choice of the nose radius you can use following nomogram (*Picture No. 3*):

图 / Picture No.3

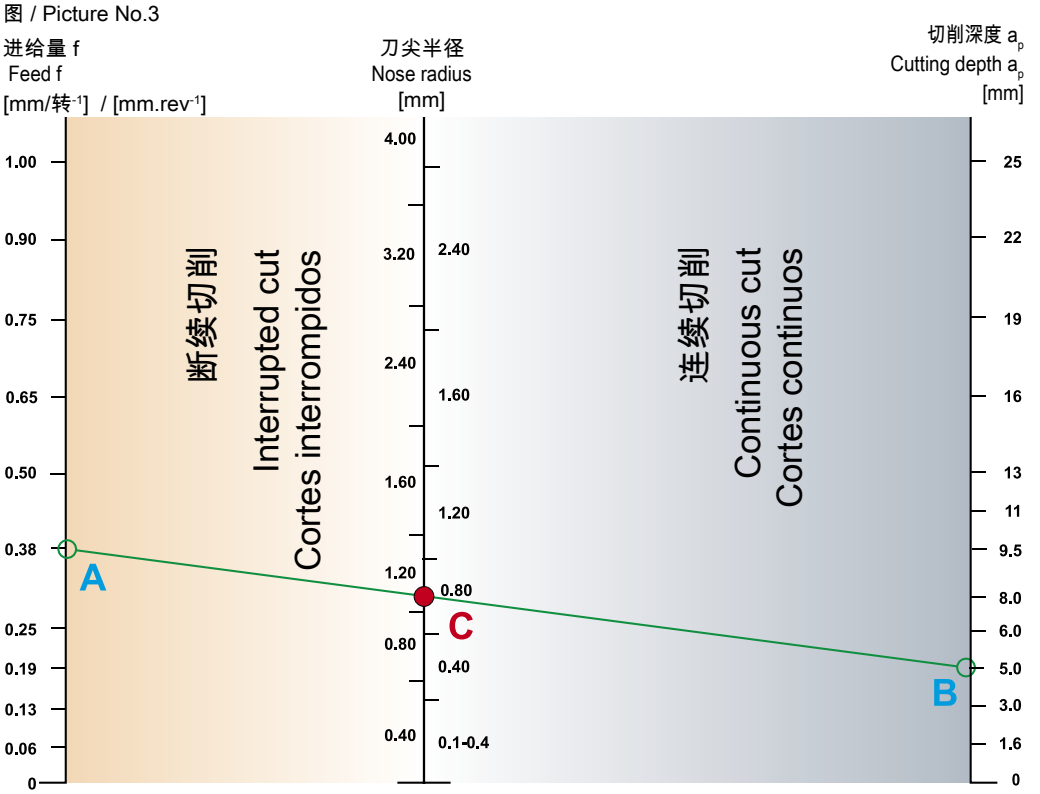

列线图应用示例：

对于要用的选定进给量或最大进给量 (点 A) 和选定的切深 a_p (点 B) (或选定的最大切深)，在中间轴上找到对应断续切削或非断续切削的合适刀尖半径尺寸 (点 C)。

Example of application of the nomogram:

For chosen feed or the maximum feed which will be used (point **A**) and chosen depth of cut $\mathbf{a}_p$ (point **B**) (again we choose the maximum) we find the suitable dimension of the nose radius with respect to interrupted or non-interrupted cut (point **C**) on middle axis.

选择断屑槽

切屑的形状取决于几个因素 – 加工材料的特性及其强度、韧性及其微观结构；切削牌号的特性，特别是其表面摩擦特性；机床的静态和动态特性；切削用冷却液；切削刃的槽型、切削工况和断屑槽的类型。在实际加工中，切削过程的所有因素共同确定切屑的形状 (可输送的剪切切屑或流动切屑或卷曲切屑挤在机床的工作空间，限制作业进行)。

每种断屑槽仅在限定的进给量和切深范围内工作 (将切屑断开)。使断屑槽工作的最小进给量取决于倒棱的宽度 x 及其角度 γ_x。仍能使断屑槽工作的最大进给量取决于出口边与切削刃的距离 b 和断屑槽的槽深 h 。

Choice of chip breaker

The shape of chip depends on several factors – properties of machined material, its strength, toughness and icrostructure, properties of cutting grade, especially its frictional properties (on face), static and dynamic properties of the machine, cutting coolant, geometry of cutting edge, cutting conditions and type of chip breaker. Practically all factors of cutting process, which in tits combination determine the shape of chip (shear transportable chip or flow chip or curled chip which crowds the working space of machine and is the obstruction which blocks the work).

Each chip breaker works (breaks the chip) only in defined range of feed and depth of cut. The **minimum feed** at which works the chip breaker **depends** on the **width of T-land x and its angle** γ_x. The maximum feed, when the chip breaker still works, depends on distance of outlet edge from the cutting edge **b** and depth of groove **h** at the groove chip breaker.

图 4

Picture No. 4

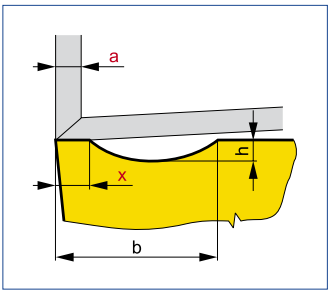

切削层厚度“a”等于进给量，远小于倒棱 “x”(在主偏角 κ_r = 90° 时，等于进给量) ，切屑与倒角仅接触，不能进入断屑槽，所以无法断开 (参见示意图)。

The thickness of layer “**a**” which is cut away is equal to feed and much smaller than T-land “**x**”(at setting angle κ_r = 90° equal to feed) than chip is in contact with chamfer only, can not enter the chip breaker and that is why it can not be broken (*see the schema*).

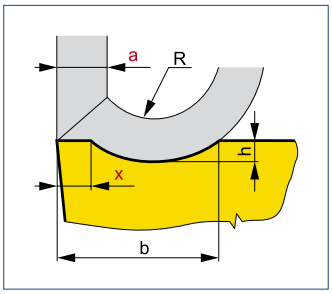

如果使用较高的进给量“f” (切削层厚度较大)，当 x < a 时 (f)，切屑进入断屑槽并在半径 R 下被断开 (见图)。

If the higher feed “**f**”is used (bigger thickness of cut away layer), when **x < a**, (f), the chip enters into chip breaker and **is broken** under the radius **R** (*see picture*).

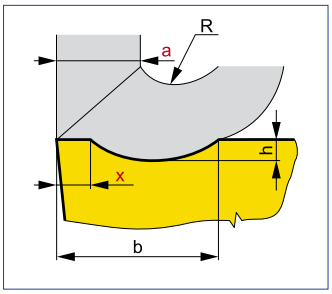

如果 x << a ，断裂的切屑太硬 (切屑破碎)。如果进一步增加进给量，切屑会错开断屑槽，不发生断裂。

If **x << a** the chip breaking is too hard (chip is crushed). By the next increasing of feed the chip misses the chip breaker without any breaking.

所有断屑槽都在限定的切削工况范围内起作用。所以，断屑槽包含在整个系列中，从而涵盖最常用切深和进给量组合的整个区域 (参见下面的示意图)。断屑槽的应用区域有相互重叠部分。

All chip breakers work in defined range of cutting conditions. This is a reason why the chip breakers are composed in integrated lines, which allow covering of the whole area of mostly used combination of depth of cut and feed *(see following schema)*. Areas of application of the chip breakers interlap.

图 5

Picture No. 5

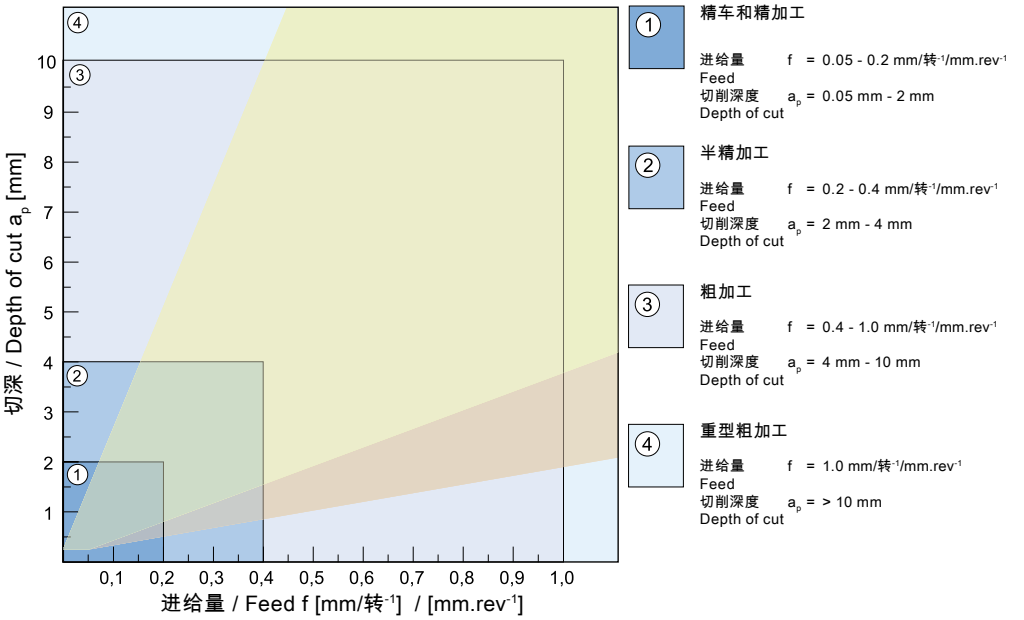

PRAMET

夹紧方式名称 CLAMPING DESIGNATION	精车和精加工 FINE TURNING AND FINISHING	半精加工 SEMI-ROUGHING
P D 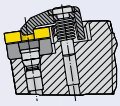 M 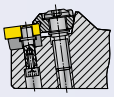	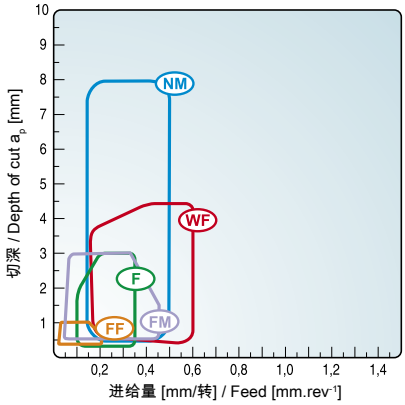	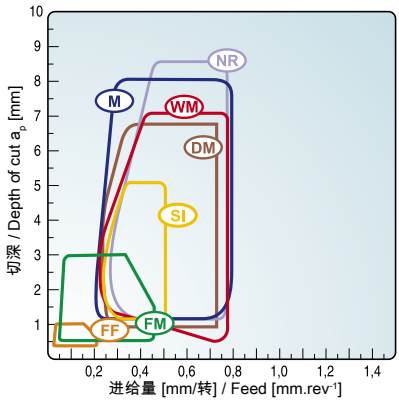
S	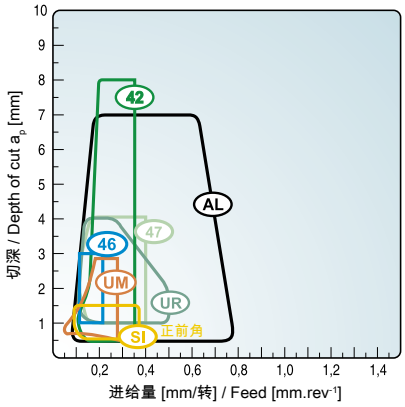	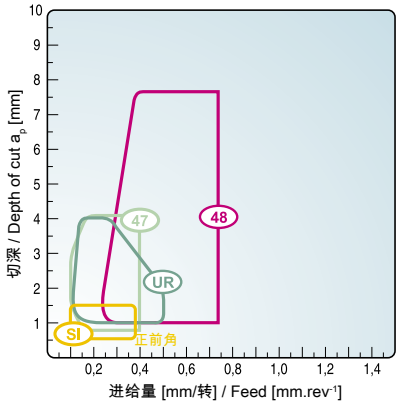
C 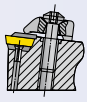 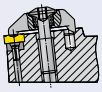	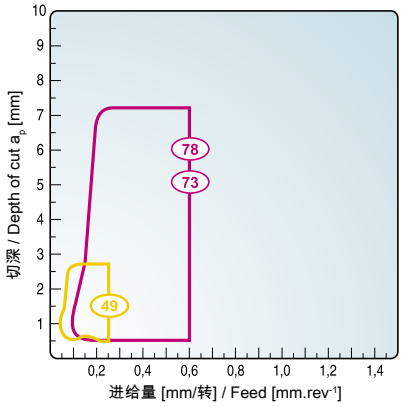	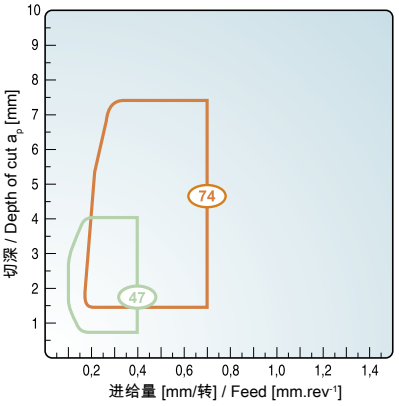

表 4
Table No. 4

刀片槽型 - 车削
GEOMETRY OF CUTTING INSERTS - TURNING

粗加工 ROUGHING	重型粗加工 HEAVY ROUGHING	夹紧方式名称 CLAMPING DESIGNATION
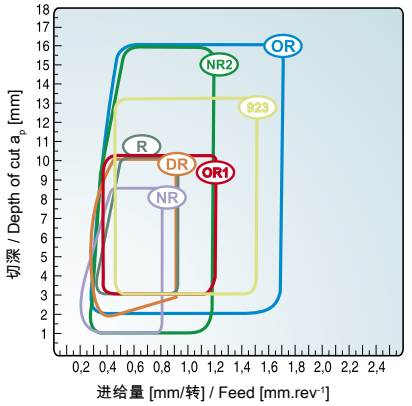	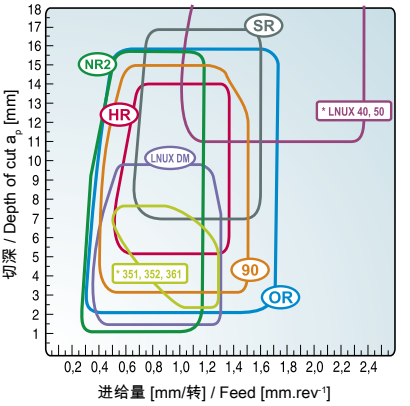	P 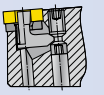 D 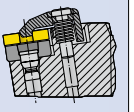 M 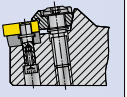
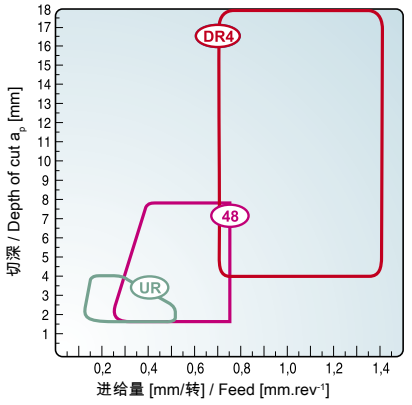	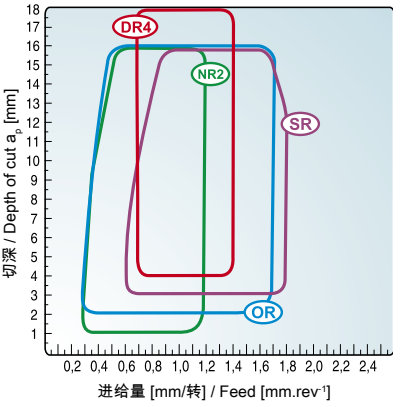	S 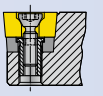
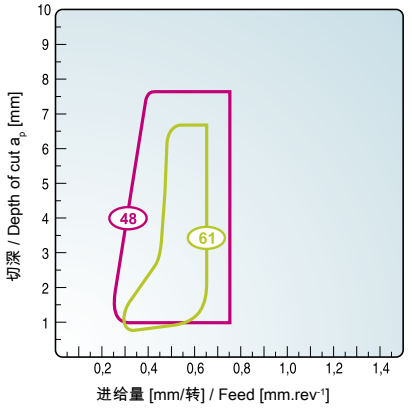		C 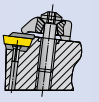 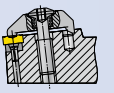

PRAMET

槽型 Geometry	夹紧名称 Clamping designation	工件材料组 Workpiece material group		P	M	K	N	S	H	应用示意图 Diagram of application	描述 Description	适用刀片 / Applied to inserts:
46	C	车削 Turning	F	■	■	■				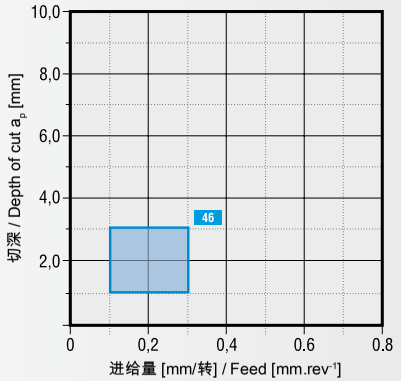	- 精车和精加工、钻孔 - 主要应用区域 – 加工材料组 P、M 和 K - 连续切削和断续切削 - fine turning and finishing, drilling - the main area of application – machined materials groups P, M and K - continuous and interrupted cut	SPMR、TPMR
	切削刃轮廓 Profile of cutting edge		M									
	0,1 R1		R								切削工况范围 / Range of cutting conditions:	
											f	0.10 - 0.30 [mm/转] / [mm.rev^{-1}]
											a_p	1.0 - 3.0 [mm]

槽型 Geometry	夹紧名称 Clamping designation	工件材料组 Workpiece material group		P	M	K	N	S	H	应用示意图 Diagram of application	描述 Description	适用刀片 / Applied to inserts:
47	C	车削 Turning	F	■	■	■				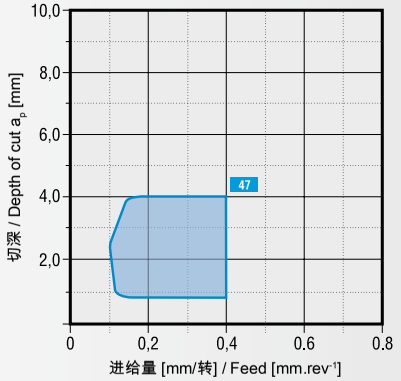	- 精加工、半精加工和钻孔 - 主要应用区域 – 加工材料组 P、M 和 K - 连续切削和断续切削 - finishing and semi-roughing and driling - the main area of application – machined materials groups P, M and K - continuous and interrupted cut	TPMR
	切削刃轮廓 Profile of cutting edge		M	■	■	■						
	0,1 R1,5		R								切削工况范围 / Range of cutting conditions:	
											f	0.10 - 0.40 [mm/转] / [mm.rev^{-1}]
											a_p	0.8 - 4.0 [mm]

■ - 主要应用 / main application □ - 其他应用 / other applications □ - 有条件应用 / conditional applications

表 5
Table No. 5

槽型 Geometry	夹紧名称 Clamping designation	工件材料组 Workpiece material group		P	M	K	N	S	H
	C	车削 Turning							
48	切削刃轮廓 Profile of cutting edge 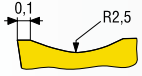		F	□	□	■			
			M	■	■	■			
			R	■	■	■			

应用示意图
Diagram of application

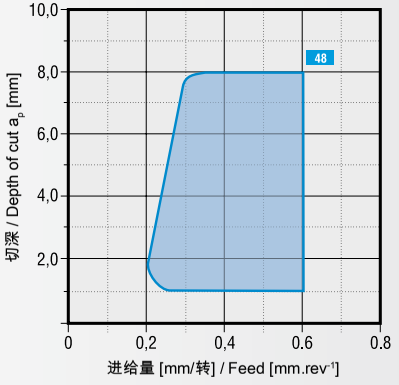

描述 Description	适用刀片 / Applied to inserts: SPMR

- 精加工、半精加工和钻孔
- 主要应用区域 – 加工材料组 P、M 和 K
- 连续切削和断续切削

- finishing and semi-roughing and driling
- the main area of application – machined materials groups P, M and K
- continuous and interrupted cut

切削工况范围 / Range of cutting conditions:

f	0.20 - 0.60 [mm/转] / [mm.rev^{-1}]
a_p	1.0 - 8.0 [mm]

槽型 Geometry	夹紧名称 Clamping designation	工件材料组 Workpiece material group		P	M	K	N	S	H
	C	车削 Turning							
61	切削刃轮廓 Profile of cutting edge 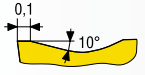		F						
			M	■	■	■		□	
			R						

应用示意图
Diagram of application

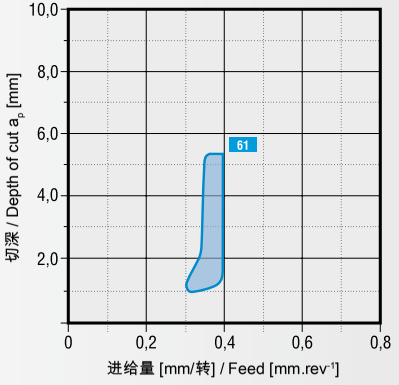

描述 Description	适用刀片 / Applied to inserts: TPMR

- 中等进给量和较大切深的机加工，特别是在精加工和钻孔中
- 主要应用区域 – 加工材料组 P、M 和 K
- 其他应用区域 - 加工材料组 S
- 连续切削和中等断续切削

- machining with middle feed and bigger depth of cut especially at finishing and drilling
- the main area of application – machined materials groups P, M and K
- further area of application - machined materials group S
- continuous and moderate interrupted cut

切削工况范围 / Range of cutting conditions:

f	0.30 - 0.40 [mm/转] / [mm.rev^{-1}]
a_p	1.0 - 5.3 [mm]

■ - 主要应用 / main application □ - 其他应用 / other applications □ - 有条件应用 / conditional applications

槽型 Geometry	夹紧名称 Clamping designation	工件材料组 Workpiece material group							应用示意图 Diagram of application	描述 Description	适用刀片 / Applied to inserts: :
	C	车削 Turning	P	M	K	N	S	H			KNUX
72	切削刃轮廓 Profile of cutting edge 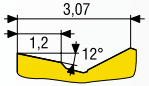	F	■	■	□	□	□		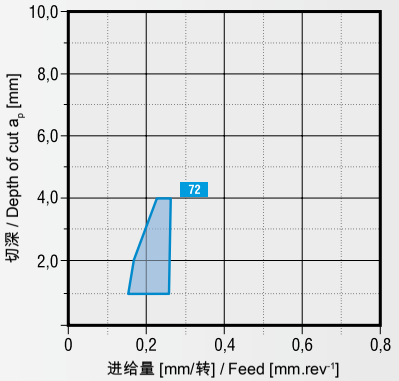	- 通用车削槽型，切削力低 - 精车和精加工 - 主要应用区域 – 加工材料组 P 和 M - 其他应用区域 - 加工材料组 K 和 S - 有条件应用 - 加工材料组 N - 连续切削 - universal turning geometry characterized by low cutting force - fine turning and finishing - the main area of application – machined materials groups P and M - further area of application - machined materials group K and S - conditional application - machined materials group N - continuous cut	
		M	■	■	□	□	□				
		R									

切削工况范围 / Range of cutting conditions:

f	0.15 - 0.23 [mm/转] / [mm.rev^{-1}]
a_p	1.0 - 4.0 [mm]

槽型 Geometry	夹紧名称 Clamping designation	工件材料组 Workpiece material group							应用示意图 Diagram of application	描述 Description	适用刀片 / Applied to inserts:
	C	车削 Turning	P	M	K	N	S	H			KNUX
73 (78)	切削刃轮廓 Profile of cutting edge 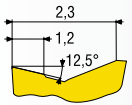	F	■	■	□	□	□		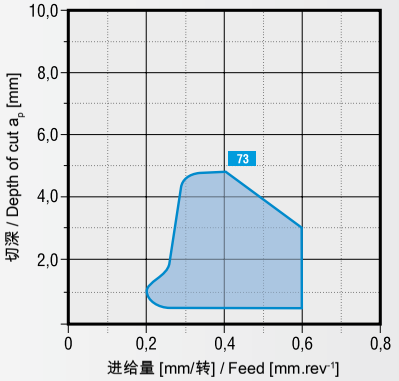	- 通用车削槽型，切削力低，具有良好的稳定性 - 粗加工至半精加工 - 主要应用区域 – 加工材料组 P 和 M - 其他应用区域 - 加工材料组 K 和 S - 有条件应用 - 加工材料组 N - 连续切削 - universal turning geometry characterized by low cutting force and good stability - roughing up to semi-roughing - the main area of application – machined materials groups P and M - further area of application - machined materials group K and S - conditional application - machined materials group N - continuous cut	
		M	■	■	□	□	□				
		R	■	■	□						

切削工况范围 / Range of cutting conditions:

f	0.20 - 0.60 [mm/转] / [mm.rev^{-1}]
a_p	0.5 - 4.8 [mm]

■ - 主要应用 / main application □ - 其他应用 / other applications □ - 有条件应用 / conditional applications

表 5
Table No. 5

刀片槽型 - 车削
GEOMETRY OF CUTTING INSERTS - TURNING

槽型 Geometry	夹紧名称 Clamping designation	工件材料组 Workpiece material group	应用示意图 Diagram of application	描述 Description	适用刀片 / Applied to inserts:
74 (79)	C				KNUX

切削刃轮廓
Profile of cutting edge

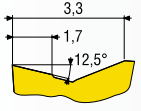

车削 Turning	P	M	K	N	S	H
F	■	■	□	□	□	
M	■	■	□	□	□	
R	■	■	□			

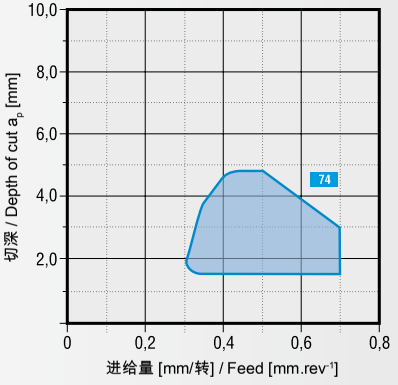

- 精加工至粗加工
- 主要应用区域 – 加工材料组 P 和 M
- 其他应用区域 - 加工材料组 K 和 S
- 有条件应用 - 加工材料组 N
- 连续切削

- finishing up to roughing
- the main area of application – machined materials groups P and M
- further area of application - machined materials group K and S
- conditional application - machined materials group N
- continuous cut

切削工况范围 / Range of cutting conditions:

f	0.30 - 0.70 [mm/转] / [mm.rev^{-1}]
a_p	1.5 - 4.8 [mm]

槽型 Geometry	夹紧名称 Clamping designation	工件材料组 Workpiece material group	应用示意图 Diagram of application	描述 Description	适用刀片 / Applied to inserts:
.PUN	C				TPUN、SPUN

切削刃轮廓
Profile of cutting edge

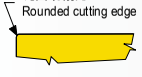

车削 Turning	P	M	K	N	S	H
F	□	□	□			
M	□	□	□			
R	□	□	□			

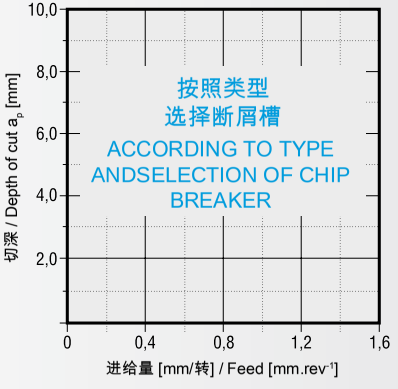

- 旧设计的刀片，与单独的容屑结构一起使用
- 从精车至粗加工 (按照刀片尺寸)
- 其他应用区域 - 加工材料组 P 和 K
- 有条件应用 - 加工材料组 M
- 连续切削和中等断续切削

- old design cutting insert used together with the separate chip former
- from fine turning up to roughing (according to dimension of insert)
- further area of application - machined materials group P and K
- conditional application - machined materials group M
- continuous and moderate interrupted cut

切削工况范围 / Range of cutting conditions:

f	0.10 - 0.60 [mm/转] / [mm.rev^{-1}]
a_p	0.4 - 17.5 [mm]

■ - 主要应用 / main application □ - 其他应用 / other applications □ - 有条件应用 / conditional applications

PRAMET

槽型 Geometry	夹紧名称 Clamping designation	工件材料组 Workpiece material group							应用示意图 Diagram of application	描述 Description	适用刀片 / Applied to inserts:
	P,M,D	车削 Turning	P	M	K	N	S	H			CNMA、DNMA、SNMA、TNMA、WNMA
...A	切削刃轮廓 Profile of cutting edge 钝圆切削刃 Rounded cutting edge	F			■			■	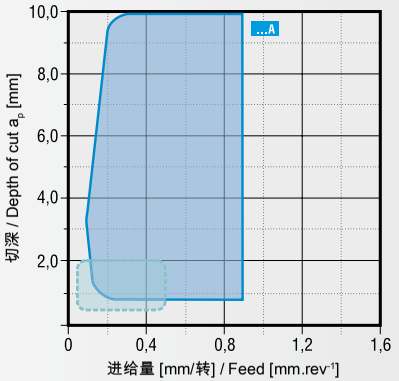	- 前角为 0 的负槽型，适合精车、精加工和半精加工 - 主要应用区域 – 加工材料组 K 和 H - 连续切削和中等断续切削 - negative geometry with zero rake suitable for fine, finishing and semi-roughing - the main area of application – machined materials groups K and H - continuous and moderate interrupted cut	
		M			■			■			
		R			□			□			

切削工况范围 / Range of cutting conditions:	
f	0.10 - 0.90 [mm/转] / [mm.rev-1]
a_p	0.8 - 12.0 [mm]

槽型 Geometry	夹紧名称 Clamping designation	工件材料组 Workpiece material group							应用示意图 Diagram of application	描述 Description	适用刀片 / Applied to inserts:
	P	车削 Turning	P	M	K	N	S	H			RNMG
08 (RNMG)	切削刃轮廓 Profile of cutting edge 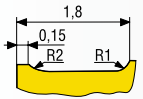	F							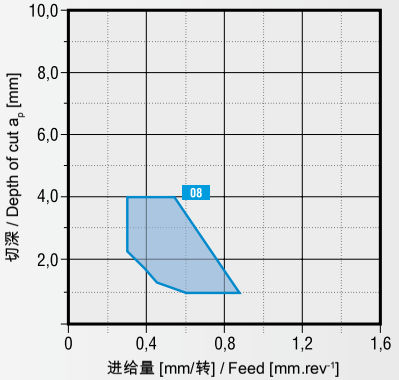	- 半精加工至重型粗加工 - 主要应用区域 – 加工材料组 P 和 K - 其他应用区域 - 加工材料组 M - 连续切削和断续切削 - semiroughing up to heavy roughing - the main area of application – machined materials groups P and K - further area of application - machined materials M - continuous and interrupted cut	
		M	■	□	■						
		R	■	□	■						

切削工况范围 / Range of cutting conditions:	
f	0.30 - 0.80 [mm/转] / [mm.rev-1]
a_p	1.0 - 4.0 [mm]

■ - 主要应用 / main application □ - 其他应用 / other applications □ - 有条件应用 / conditional applications

表 5
Table No. 5

槽型 Geometry	夹紧名称 Clamping designation	工件材料组 Workpiece material group		P	M	K	N	S	H	应用示意图 Diagram of application	描述 Description	适用刀片 / Applied to inserts: RCMX
31 (RCMX)	P	车削 Turning	F	■	□	■				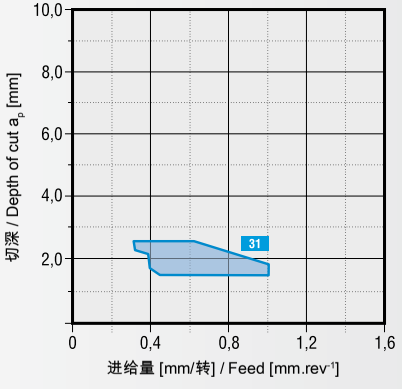	- 精加工和半精加工 - 主要应用区域 – 加工材料组 P 和 K - 其他应用区域 - 加工材料组 M - 精加工和半精加工 - finishing and semi-roughing - the main area of application – machined materials groups P and K - further area of application - machined materials M - finishing and semi-roughing	
			M	■	□	■						
	切削刃轮廓 Profile of cutting edge		R								切削工况范围 / Range of cutting conditions:	
	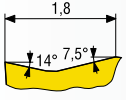										f	0.40 - 1.00 [mm/转] / [mm.rev⁻¹]
											a_p	1.5 - 2.5 [mm]

槽型 Geometry	夹紧名称 Clamping designation	工件材料组 Workpiece material group		P	M	K	N	S	H	应用示意图 Diagram of application	描述 Description	适用刀片 / Applied to inserts: RCMX
321 (RCMX)	P	车削 Turning	M							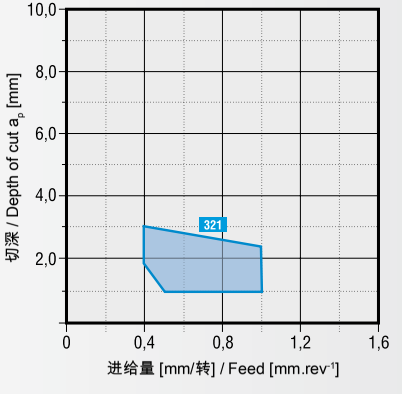	- 半精加工至重型粗加工 - 主要应用区域 – 加工材料组 P 和 K - 主要应用区域 – 加工材料组 M - 连续切削和断续切削 - semi-roughing up to heavy roughing - the main area of application – machined materials groups P and K - the main area of application – machined materials groups M - continuous and interrupted cut	
			R	■	□	■						
	切削刃轮廓 Profile of cutting edge		SR	■	□	■					切削工况范围 / Range of cutting conditions:	
	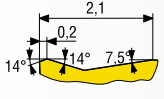										f	0.40 - 1.00 [mm/转] / [mm.rev⁻¹]
											a_p	1.0 - 3.0 [mm]

■ - 主要应用 / main application □ - 其他应用 / other applications □ - 有条件应用 / conditional applications

PRAMET

槽型 Geometry	夹紧名称 Clamping designation	工件材料组 Workpiece material group		P	M	K	N	S	H	应用示意图 Diagram of application	描述 Description	适用刀片 / Applied to inserts: RCMX
331 (RCMX)	P	车削 Turning	M							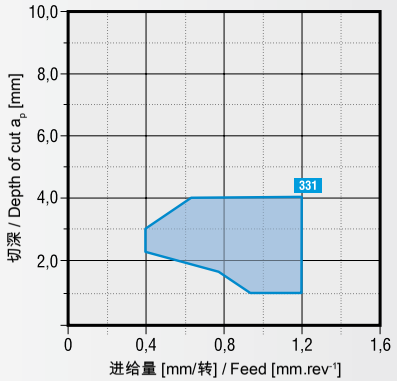	- 半精加工至重型粗加工 - 主要应用区域 – 加工材料组 P 和 K - 主要应用区域 – 加工材料组 M - 连续切削和断续切削 - semi-roughing up to heavy roughing - the main area of application – machined materials groups P and K - the main area of application – machined materials groups M - continuous and interrupted cut	
			R	■	□	■						
			SR	■	□	■						

切削刃轮廓
Profile of cutting edge

切削工况范围 / Range of cutting conditions:	
f	0.40 - 1.20 [mm/转] / [mm.rev^{-1}]
a_p	1.0 - 4.0 [mm]

槽型 Geometry	夹紧名称 Clamping designation	工件材料组 Workpiece material group		P	M	K	N	S	H	应用示意图 Diagram of application	描述 Description	适用刀片 / Applied to inserts: RCMX
341 (RCMX)	P	车削 Turning	M							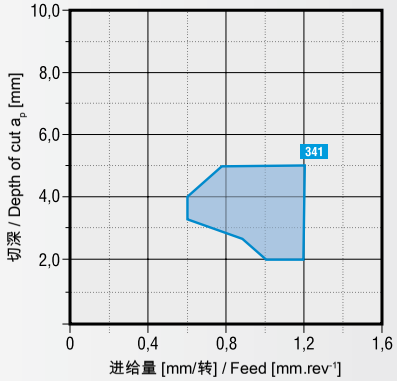	- 半精加工至重型粗加工 - 主要应用区域 – 加工材料组 P 和 K - 主要应用区域 – 加工材料组 M - 连续切削和断续切削 - semi-roughing up to heavy roughing - the main area of application – machined materials groups P and K - the main area of application – machined materials groups M - continuous and interrupted cut	
			R	■	□	■						
			SR	■	□	■						

切削刃轮廓
Profile of cutting edge

切削工况范围 / Range of cutting conditions:	
f	0.60 - 1.20 [mm/转] / [mm.rev^{-1}]
a_p	2.0 - 5.0 [mm]

■ - 主要应用 / main application □ - 其他应用 / other applications □ - 有条件应用 / conditional applications

表 5
Table No. 5

槽型 Geometry	夹紧名称 Clamping designation	工件材料组 Workpiece material group							应用示意图 Diagram of application	描述 Description	适用刀片 / Applied to inserts:
	P,M,D	车削 Turning	P	M	K	N	S	H			CNMG、DNMG、SNMG、WNMG、(LNUX)
DM		F	■	□	■			□	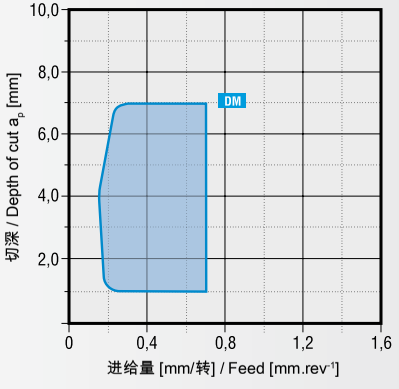	- 粗加工至半精加工 - 主要应用区域 – 加工材料组 P 和 K - 其他应用区域 - 加工材料组 M - 有条件应用 - 加工材料组 H - 连续切削和中等断续切削 - roughing up to semi-roughing - the main area of application – machined materials groups P and K - further area of application - machined materials group M - conditional application - machined materials group H - continuous and moderate interrupted cut	
	切削刃轮廓 Profile of cutting edge	M	■	□	■			□			
	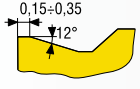	R									

切削工况范围 / Range of cutting conditions:

f	0.15 - 0.70 [mm/转] / [mm.rev^{-1}]
a_p	1.0 - 7.0 [mm]

槽型 Geometry	夹紧名称 Clamping designation	工件材料组 Workpiece material group							应用示意图 Diagram of application	描述 Description	适用刀片 / Applied to inserts:
	P (M,D)	车削 Turning	P	M	K	N	S	H			CNMM、DNMM、SNMM、TNMM、WNMM
DR		F							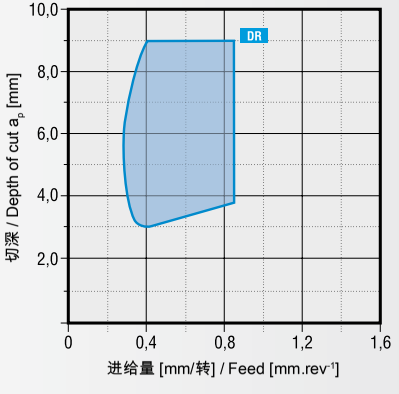	- 粗加工和半精加工 - 主要应用区域 – 加工材料组 P 和 M - 其他应用区域 - 加工材料组 K - 有条件应用 - 加工材料组 S - 连续切削和断续切削 - semi-roughing and roughing - the main area of application – machined materials groups P and M - further area of application - machined materials group K - conditional application - machined materials group S - continuous and interrupted cut	
	切削刃轮廓 Profile of cutting edge	M	■	■	□		□				
	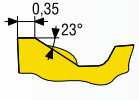	R	■	■	□		□				

切削工况范围 / Range of cutting conditions:

f	0.30 - 0.85 [mm/转] / [mm.rev^{-1}]
a_p	2.5 - 9.0 [mm]

■ - 主要应用 / main application □ - 其他应用 / other applications □ - 有条件应用 / conditional applications

PRAMET

槽型 Geometry	夹紧名称 Clamping designation	工件材料组 Workpiece material group							应用示意图 Diagram of application	描述 Description	适用刀片 / Applied to inserts:
	P,M,D	车削 Turning	P	M	K	N	S	H			CNMG、DNMG、TNMG、VNMG、WNMG
FF	切削刃轮廓 Profile of cutting edge 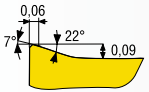	F	■	■	□	□	□		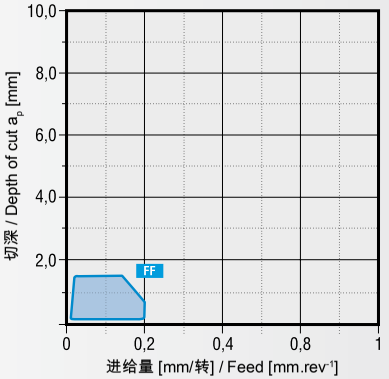	- 精车和精加工 - 主要应用区域 – 加工材料组 P - 有条件应用 - 加工材料组 M - 连续切削 - fine turning and finishing - the main area of application – machined materials groups P - conditional application - machined materials group M - continuous cut	
		M									
		R									

切削工况范围 / Range of cutting conditions:

f	0.06 - 0.2 [mm/转] / [mm.rev^{-1}]
a_p	0.3 - 1.5 [mm]

槽型 Geometry	夹紧名称 Clamping designation	工件材料组 Workpiece material group							应用示意图 Diagram of application	描述 Description	适用刀片 / Applied to inserts:
	P,M,D	车削 Turning	P	M	K	N	S	H			CNMG、DNMG、SNMG、TNMG、WNMG、VNMG
F	切削刃轮廓 Profile of cutting edge 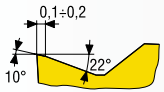	F	■	■	□	□	□		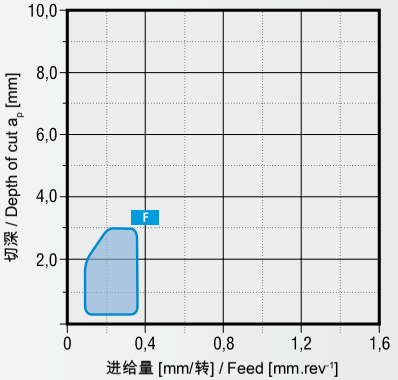	- 精车和精加工 - 主要应用区域 – 加工材料组 P 和 M - 其他应用区域 - 加工材料组 K - 有条件应用 - 加工材料组 N 和 S - 连续切削和中等断续切削 - fine turning and finishing - the main area of application – machined materials groups P and M - further area of application - machined materials group K - conditional application - machined materials group N and S - continuous and moderate interrupted cut	
		M	□	■		□					
		R									

切削工况范围 / Range of cutting conditions:

f	0.08 - 0.35 [mm/转] / [mm.rev^{-1}]
a_p	0.5 - 3.0 [mm]

■ - 主要应用 / main application □ - 其他应用 / other applications □ - 有条件应用 / conditional applications

表 5
Table No. 5

槽型 Geometry	夹紧名称 Clamping designation	工件材料组 Workpiece material group		P	M	K	N	S	H	应用示意图 Diagram of application	描述 Description	适用刀片 / Applied to inserts:
FM	P,M,D	车削 Turning	F	■	■	□		□		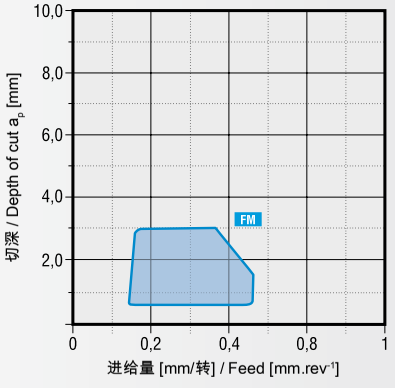	- 精加工和半精加工 - 主要应用区域 – 加工材料组 P 和 M - 其他应用区域 - 加工材料组 K - 有条件应用 - 加工材料组 S - 连续切削和中等断续切削 - finishing and semi-roughing - the main area of application – machined materials groups P and M - further area of application - machined materials group K - conditional application - machined materials group S - continuous and moderate interrupted cut	CNMG、DNMG、SNMG、TNMG、VNMG、WNMG
			M	■	■	□		□				
	切削刃轮廓 Profile of cutting edge 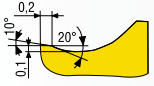		R								切削工况范围 / Range of cutting conditions:	
											f	0.15 - 0.45 [mm/转] / [mm.rev⁻¹]
											a_p	0.5 - 3.0 [mm]

槽型 Geometry	夹紧名称 Clamping designation	工件材料组 Workpiece material group		P	M	K	N	S	H	应用示意图 Diagram of application	描述 Description	适用刀片 / Applied to inserts:
M	P,M,D	车削 Turning	F	■	□	■			□	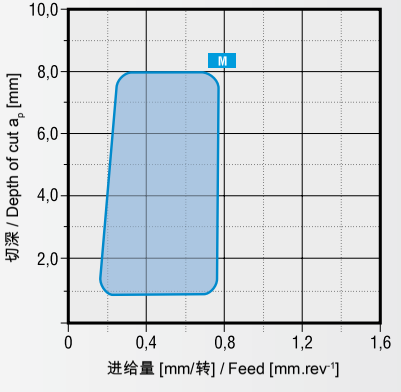	- 精加工和半精加工 - 主要应用区域 – 加工材料组 P 和 K - 其他应用区域 - 加工材料组 M - 有条件应用 - 加工材料组 H - 连续切削 - finishing and semi-roughing - the main area of application – machined materials groups P and K - further area of application - machined materials group M - conditional application - machined materials group H - continuous cut	CNMG、DNMG、SNMG、TNMG、VNMG、WNMG
			M	■	□	■			□			
	切削刃轮廓 Profile of cutting edge 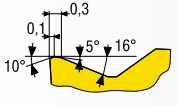		R								切削工况范围 / Range of cutting conditions:	
											f	0.17 - 0.80 [mm/转] / [mm.rev⁻¹]
											a_p	1.0 - 8.0 [mm]

■ - 主要应用 / main application □ - 其他应用 / other applications □ - 有条件应用 / conditional applications

PRAMET

槽型 Geometry	夹紧名称 Clamping designation	工件材料组 Workpiece material group		P	M	K	N	S	H
	P,M,D	车削 Turning							
NM			F	■	■	□	□	■	
	切削刃轮廓 Profile of cutting edge		M	■	■	□	□	■	
	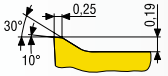		R	■	■	□	□	■	

应用示意图
Diagram of application

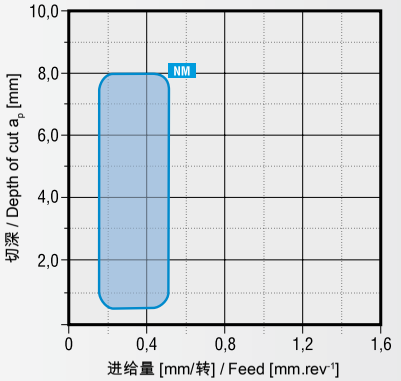

描述 Description	适用刀片 / Applied to inserts: CNMG、DNMG、TNMG、VNMG、WNMG

- 双边断屑槽不仅用于轻型精加工，但也用于半精加工至粗加工
- 用于耐腐材料的加工，适用于车削普通碳素钢和合金钢以及Fe、Ni、Co基超级合金
- 有条件用于铸铁和有色金属的加工。

- double sided chipbreaker not only for light finishing but also for medium machining up to roughing
- used for machining of corrosion resistant materials, suitable for turning of common carbon steels and alloyed steels, super alloys on base of Fe, Ni, Co
- conditionally suitable for machining of cast iron and non ferrous metals.

切削工况范围 / Range of cutting conditions:

f	0.15 - 0.50 [mm/转] / [mm.rev^{-1}]
a_p	0.5 - 8.0 [mm]

槽型 Geometry	夹紧名称 Clamping designation	工件材料组 Workpiece material group		P	M	K	N	S	H
	P (M,D)	车削 Turning							
NR	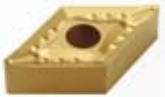		F						
	切削刃轮廓 Profile of cutting edge		M	■	■	□	□	■	
	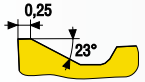		R	□	■		□	□	

应用示意图
Diagram of application

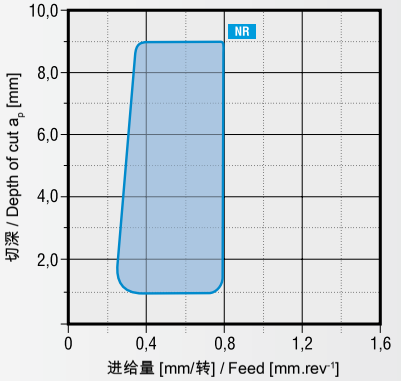

描述 Description	适用刀片 / Applied to inserts: CNMM、DNMM、SNMM、TNMM、WNMM

- 粗加工和半精加工
- 主要应用区域 – 加工材料组 P 和 M
- 其他应用区域 - 加工材料组 K
- 有条件应用 - 加工材料组 S
- 连续切削和断续切削

- semi-roughing and roughing
- the main area of application – machined materials groups P and M
- further area of application - machined materials group K
- conditional application - machined materials group S
- continuous and interrupted cut

切削工况范围 / Range of cutting conditions:

f	0.25 - 0.80 [mm/转] / [mm.rev^{-1}]
a_p	1.0 - 9.0 [mm]

■ - 主要应用 / main application □ - 其他应用 / other applications □ - 有条件应用 / conditional applications

表 5
Table No. 5

槽型 Geometry	夹紧名称 Clamping designation	工件材料组 Workpiece material group	应用示意图 Diagram of application	描述 Description
	P (M,D)	车削 Turning: P, M, K, N, S, H		适用刀片 / Applied to inserts: CNMM、DNMM、SNMM、TNMM、WNMM
NR2	切削刃轮廓 Profile of cutting edge 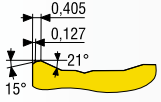	F: ■ ■ □ □ M: ■ ■ □ □ R: ■ ■ □ □	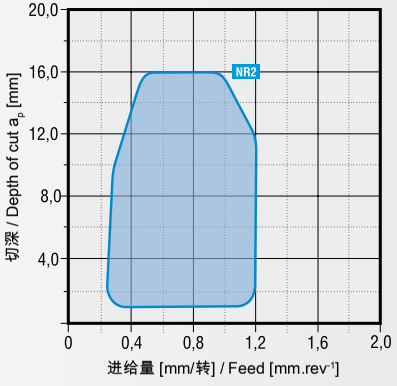	- 通用车削槽型，用于极重型粗加工至精加工 - 主要应用区域 – 加工材料组 P 和 M - 其他应用区域 - 加工材料组 K - 有条件应用 - 加工材料组 S - 从连续切削到断续切削 - versatile turning geometry applicable for very heavy roughing up to finishing - the main area of application – machined materials groups P and M - further area of application - machined materials group K - conditional application - machined materials group S - from continuos up to interrupted cut

切削工况范围 / Range of cutting conditions:

f	0.25 - 1.20 [mm/转] / [mm.rev^{-1}]
a_p	1.0 - 16.0 [mm]

槽型 Geometry	夹紧名称 Clamping designation	工件材料组 Workpiece material group	应用示意图 Diagram of application	描述 Description
	P (M,D)	车削 Turning: P, M, K, N, S, H		适用刀片 / Applied to inserts: CNMM、DNMM、SNMM、TNMM、WNMM、SCMT
OR	切削刃轮廓 Profile of cutting edge 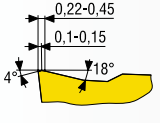	F: ■ ■ □ □ M: ■ ■ □ □ R: ■ ■ □ □	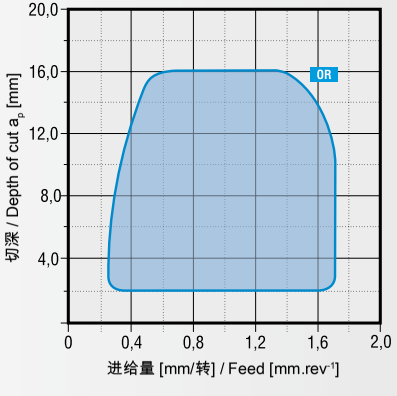	- 通用车削槽型，用于极重型粗加工至精加工 - 主要应用区域 – 加工材料组 P 和 M - 其他应用区域 - 加工材料组 K - 有条件应用 - 加工材料组 S - 从连续切削到断续切削 - versatile turning geometry applicable for very heavy roughing up to finishing - the main area of application – machined materials groups P and M - further area of application - machined materials group K - conditional application - machined materials group S - from continuos up to interrupted cut

切削工况范围 / Range of cutting conditions:

f	0.25 - 1.70 [mm/转] / [mm.rev^{-1}]
a_p	2.0 - 16.0 [mm]

■ - 主要应用 / main application □ - 其他应用 / other applications □ - 有条件应用 / conditional applications

槽型 Geometry	夹紧名称 Clamping designation	工件材料组 Workpiece material group		P	M	K	N	S	H	应用示意图 Diagram of application	描述 Description	适用刀片 / Applied to inserts:
OR1	P,M,D	车削 Turning	F									CNMM、SNMM
			M	■	■	□		□			- 适用于半精加工、粗加工、较轻的重型粗加工 - 主要应用区域 – 加工材料组 P 和 M - 其他应用区域 - 加工材料组 K - 有条件应用 - 加工材料组 S - 连续切削和断续切削 - suitable for semi-roughing, roughing and light heavy roughing - the main area of application – machined materials groups P and M - further area of application - machined materials group K - conditional application - machined materials group S - continuous and interrupted cut	
			R	■	■	□		□				切削工况范围 / Range of cutting conditions:
												f: 0.37 - 1.20 [mm/转] / [mm.rev^{-1}]
												a_p: 3.0 - 10.0 [mm]

切削刃轮廓
Profile of cutting edge

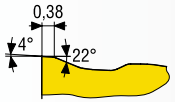

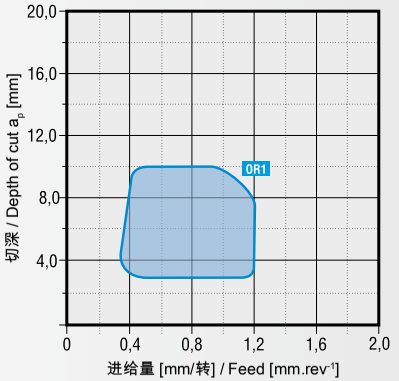

槽型 Geometry	夹紧名称 Clamping designation	工件材料组 Workpiece material group		P	M	K	N	S	H	应用示意图 Diagram of application	描述 Description	适用刀片 / Applied to inserts:
R	P,M,D	车削 Turning	F						□			CNMG、DNMG、SNMG、TNMG、WNMG
			M	■	□	■			□		- 粗加工和半精加工 - 主要应用区域 – 加工材料组 P 和 K - 其他应用区域 - 加工材料组 M - 有条件应用 - 加工材料组 H - 连续切削和断续切削 - semi-roughing and roughing - the main area of application – machined materials groups P and K - further area of application - machined materials group M - conditional application - machined materials group H - continuous and interrupted cut	
			R	■	□	■						切削工况范围 / Range of cutting conditions:
												f: 0.30 - 0.80 [mm/转] / [mm.rev^{-1}]
												a_p: 3.0 - 10.0 [mm]

切削刃轮廓
Profile of cutting edge

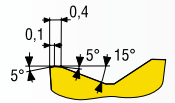

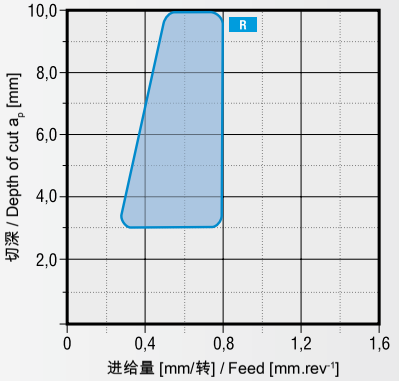

■ - 主要应用 / main application □ - 其他应用 / other applications □ - 有条件应用 / conditional applications

表 5
Table No. 5

刀片槽型 - 车削
GEOMETRY OF CUTTING INSERTS - TURNING

槽型 Geometry: **SI**

夹紧名称 Clamping designation: **P,M,D**

切削刃轮廓 Profile of cutting edge

工件材料组 Workpiece material group — 车削 Turning

	P	M	K	N	S	H
F	■	■	□	□	■	
M	■	■	□	□	■	
R						

应用示意图 Diagram of application

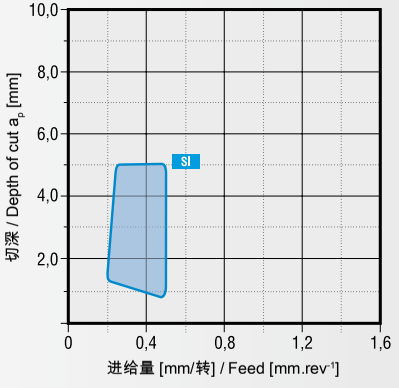

描述 Description

适用刀片 / Applied to inserts: CNMG、DNMG、TNMG、WNMG

- (精车) 精加工和半精加工
- 主要应用区域 – 加工材料组 P、M 和 S
- 有条件应用 - 加工材料组 K 和 N
- 连续切削

- (fine) finishing and semi-roughing
- the main area of application – machined materials groups P, M and S
- conditional application - machined materials group K and N
- continuous cut

切削工况范围 / Range of cutting conditions:

f	0.20 - 0.50 [mm/转] / [mm.rev^{-1}]
a_p	0.8 - 5.0 [mm]

槽型 Geometry: **WF**

夹紧名称 Clamping designation: **P,M,D**

切削刃轮廓 Profile of cutting edge

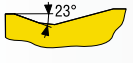

工件材料组 Workpiece material group — 车削 Turning

	P	M	K	N	S	H
F	■		■			
M	■		■			
R						

应用示意图 Diagram of application

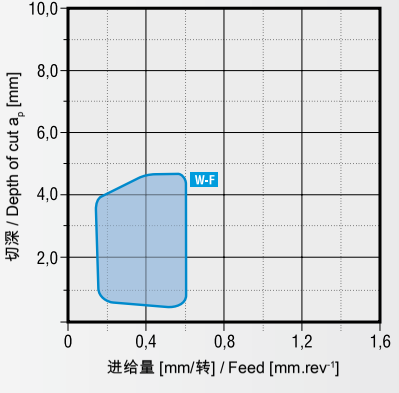

描述 Description

适用刀片 / Applied to inserts: CNMG、WNMG

- 精车和精加工
- 修光刃槽型用于高生产率车削
- 主要应用区域 – 加工材料组 P 和 K
- 连续切削

- fine turning and finishing
- WIPER geometry for high productive turning
- the main area of application – machined materials groups P and K
- continuous cut

切削工况范围 / Range of cutting conditions:

f	0.15 - 0.60 [mm/转] / [mm.rev^{-1}]
a_p	0.4 - 4.4 [mm]

■ - 主要应用 / main application □ - 其他应用 / other applications □ - 有条件应用 / conditional applications

PRAMET

槽型 Geometry	夹紧名称 Clamping designation	工件材料组 Workpiece material group							应用示意图 Diagram of application	描述 Description	适用刀片 / Applied to inserts:
	P,M,D	车削 Turning	P	M	K	N	S	H			CNMG、WNMG
WM	切削刃轮廓 Profile of cutting edge 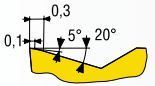	F	■		■				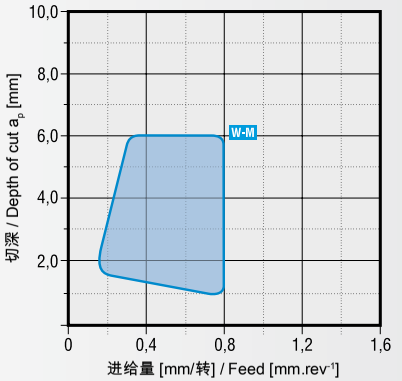	- 半精加工至粗加工 - 修光刃槽型用于高生产率车削 - 主要应用区域 – 加工材料组 P 和 K - 连续切削和中等断续切削 - semi-roughing up to roughing - WIPER geometry for high productive turning - the main area of application – machined materials groups P and K - continuous and moderate interrupted cut	
		M	■		■					切削工况范围 / Range of cutting conditions:	
		R	■		■					f	0.17 - 0.80 [mm/转] / [mm.rev^{-1}]
										a_p	1.0 - 6.0 [mm]

槽型 Geometry	夹紧名称 Clamping designation	工件材料组 Workpiece material group							应用示意图 Diagram of application	描述 Description	适用刀片 / Applied to inserts:
	S	车削 Turning	P	M	K	N	S	H			TCMT
40	切削刃轮廓 Profile of cutting edge 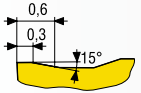	F	■	■	■				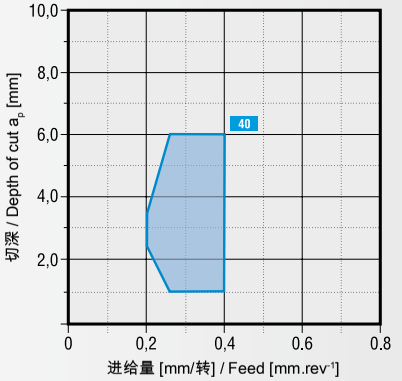	- 小进给量和较大切深的机加工，特别是在精加工和钻孔中 - 主要应用区域 - 加工材料组 P、M 和 K - 连续切削和中等断续切削 - machining with low feed and bigger depth of cut especially at finishing and drilling - the main area of application - machined materials groups P, M and K - continuous and moderate interrupted cut	
		M								切削工况范围 / Range of cutting conditions:	
		R								f	0.20 - 0.40 [mm/转] / [mm.rev^{-1}]
										a_p	1.0 - 6.0 [mm]

■ - 主要应用 / main application □ - 其他应用 / other applications □ - 有条件应用 / conditional applications

表 5
Table No. 5

刀片槽型 - 车削
GEOMETRY OF CUTTING INSERTS - TURNING

槽型 Geometry	夹紧名称 Clamping designation	工件材料组 Workpiece material group		P	M	K	N	S	H	应用示意图 Diagram of application	描述 Description	适用刀片 / Applied to inserts:
42	S	车削 Turning	F	■	■	■				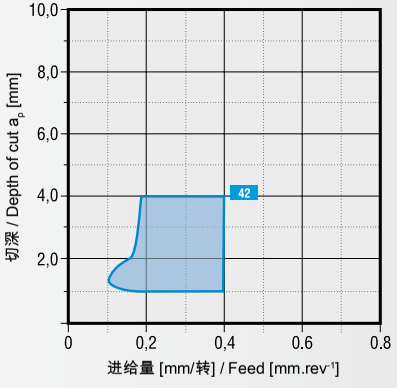	- 精车和精加工 - 主要应用区域 – 加工材料组 P、M 和 K - 连续切削和断续切削 - fine turning and finishing - the main area of application – machined materials groups P, M and K - continuous and interrupted cut	VCMT
			M									
	切削刃轮廓 Profile of cutting edge		R								切削工况范围 / Range of cutting conditions:	
	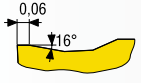										f	0.10 - 0.40 [mm/转] / [mm.rev^{-1}]
											a_p	1.0 - 4.0 [mm]

槽型 Geometry	夹紧名称 Clamping designation	工件材料组 Workpiece material group		P	M	K	N	S	H	应用示意图 Diagram of application	描述 Description	适用刀片 / Applied to inserts:
46	S	车削 Turning	F	■	■	■				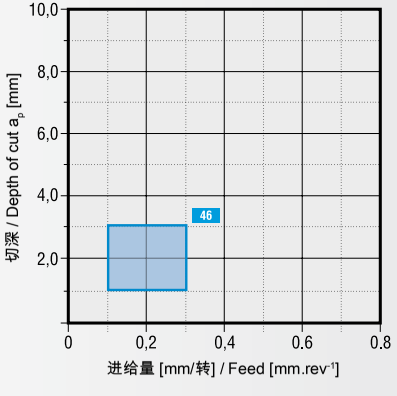	- 精车、精加工和钻孔 - 主要应用区域 – 加工材料组 P、M 和 K - 该槽型适用于车削以及钻削 (刀片 WCMX 和 WCMT) - 连续切削和断续切削 - fine turning and finishing and driling - the main area of application – machined materials groups P, M and K - this geometry is suitable for turning as well as for drilling (insert WCMX and WCMT) - continuous and interrupted cut	CCMT、TCMT、WCMT、WCMX
			M									
	切削刃轮廓 Profile of cutting edge		R								切削工况范围 / Range of cutting conditions:	
											f	0.10 - 0.30 [mm/转] / [mm.rev^{-1}]
											a_p	1.0 - 3.0 [mm]

■ - 主要应用 / main application □ - 其他应用 / other applications □ - 有条件应用 / conditional applications

PRAMET

槽型 Geometry	夹紧名称 Clamping designation	工件材料组 Workpiece material group	P	M	K	N	S	H	应用示意图 Diagram of application	描述 Description	适用刀片 / Applied to inserts:
47	S	F	■	■	■				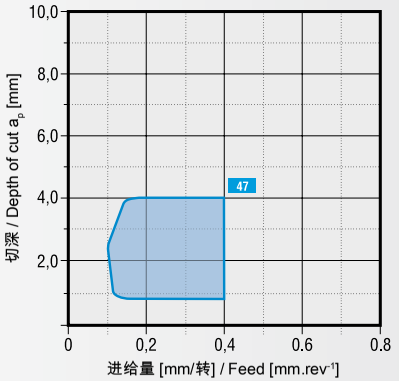		CCMT、DCMT、SCMT、VCMT、WCMT、WCMX
		M	■	■	■					- 精加工、钻孔 - 主要应用区域 – 加工材料组 P、M 和 K - 该槽型适用于车削以及钻削 (刀片 WCMX 和 WCMT) - 连续切削和断续切削 - finishing, drilling - the main area of application – machined materials groups P, M and K - this geometry is suitable for turning as well as for drilling (insert WCMX and WCMT) - continuous and interrupted cut	
		R								切削工况范围 / Range of cutting conditions:	
										f	0.10 - 0.40 [mm/转] / [mm.rev^{-1}]
										a_p	0.8 - 4.0 [mm]

槽型 Geometry	夹紧名称 Clamping designation	工件材料组 Workpiece material group	P	M	K	N	S	H	应用示意图 Diagram of application	描述 Description	适用刀片 / Applied to inserts:
48	S	F	■	■	■				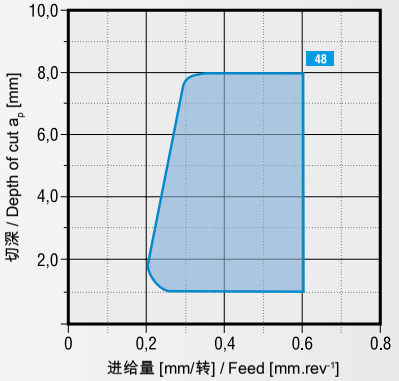		CCMT、DCMT、SCMT、VCMT、WCMT、WCMX
		M	■	■	■					- 精加工、半精加工和钻孔 - 主要应用区域 – 加工材料组 P、M 和 K - 该槽型适用于车削以及钻削 (刀片 WCMX 和 WCMT) - 连续切削和断续切削 - finishing and semi-roughing, driling - the main area of application – machined materials groups P, M and K - this geometry is suitable for turning as well as for drilling (Inserts WCMX a WCMT) - continuous cut and interrupted cut	
		R								切削工况范围 / Range of cutting conditions:	
										f	0.20 - 0.60 [mm/转] / [mm.rev^{-1}]
										a_p	1.0 - 8.0 [mm]

■ - 主要应用 / main application □ - 其他应用 / other applications □ - 有条件应用 / conditional applications

表 5
Table No. 5

刀片槽型 - 车削
GEOMETRY OF CUTTING INSERTS - TURNING

槽型 Geometry: **371 (RCMT)**

夹紧名称 Clamping designation: **S**

切削刃轮廓 Profile of cutting edge

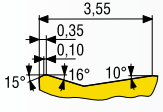

工件材料组 Workpiece material group	车削 Turning	P	M	K	N	S	H
M							
R		■	□	■			
SR		■	□	■			

应用示意图 Diagram of application

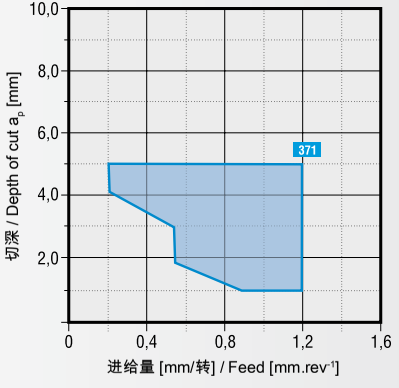

描述 Description: 适用刀片 / Applied to inserts: RCMT

- 半精加工至重型粗加工
- 主要应用区域 – 加工材料组 P 和 K
- 主要应用区域 – 加工材料组 M
- 连续切削和断续切削

- semi-roughing up to heavy roughing
- the main area of application – machined materials groups P and K
- the main area of application – machined materials groups M
- continuous and interrupted cut

切削工况范围 / Range of cutting conditions:

f	0.20 - 1.20 [mm/转] / [mm.rev^{-1}]
a_p	1.0 - 5.0 [mm]

槽型 Geometry: **372 (RCMT)**

夹紧名称 Clamping designation: **S**

切削刃轮廓 Profile of cutting edge

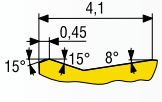

工件材料组 Workpiece material group	车削 Turning	P	M	K	N	S	H
M							
R		■	□	■			
SR		■	□	■			

应用示意图 Diagram of application

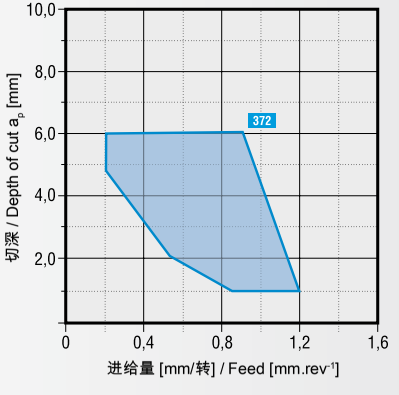

描述 Description: 适用刀片 / Applied to inserts: RCMT

- 半精加工至重型粗加工
- 主要应用区域 – 加工材料组 P 和 K
- 主要应用区域 – 加工材料组 M
- 连续切削和断续切削

- semi-roughing up to heavy roughing
- the main area of application – machined materials groups P and K
- the main area of application – machined materials groups M
- continuous and interrupted cut

切削工况范围 / Range of cutting conditions:

f	0.20 - 1.20 [mm/转] / [mm.rev^{-1}]
a_p	1.0 - 6.0 [mm]

■ - 主要应用 / main application □ - 其他应用 / other applications □ - 有条件应用 / conditional applications

PRAMET

槽型 Geometry	夹紧名称 Clamping designation	工件材料组 Workpiece material group	P	M	K	N	S	H	应用示意图 Diagram of application	描述 Description	适用刀片 / Applied to inserts:
AL	S	F				■					CCGT、DCGT、SCGT、RCGT、TCGT、VCGT、WCGT
		M				■				- 大正前角车削槽型，带锋利的切削刃 - 从铝和铝合金的精车至粗加工 - 主要应用区域 – 加工材料组 N - 连续切削 - high positive turning geometry with the sharp cutting edge - from fine turning up to roughing of AL and AL alloys - the main area of application – machined materials groups N - continuous cut	
		R				■				切削工况范围 / Range of cutting conditions:	
										f	0.05 - 0.60 [mm/转] / [mm.rev^{-1}]
										a_p	0.2 - 7.0 [mm]

切削刃轮廓
Profile of cutting edge

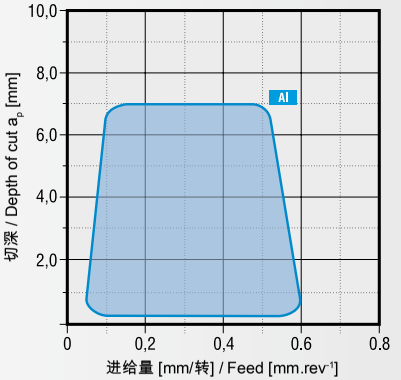

槽型 Geometry	夹紧名称 Clamping designation	工件材料组 Workpiece material group	P	M	K	N	S	H	应用示意图 Diagram of application	描述 Description	适用刀片 / Applied to inserts:
SI	S	F	■	■	□	□	■				CCGT、TCGT
		M	■	■	□	□	■			- 通用车削槽型，切削力低 - 精加工至半精加工、钻孔 - 主要应用区域 – 加工材料组 P、M 和 S - 其他应用区域 - 加工材料组 K - 有条件应用 - 加工材料组 N - 连续切削 - universal turning geometry charactized by low cutting force - finishing up to semi-roughing, driling - the main area of application – machined materials groups P, M and S - further area of application - machined materials group K - conditional application - machined materials group N - continuous cut	
		R								切削工况范围 / Range of cutting conditions:	
										f	0.08 - 0.45 [mm/转] / [mm.rev^{-1}]
										a_p	0.4 - 4.0 [mm]

切削刃轮廓
Profile of cutting edge

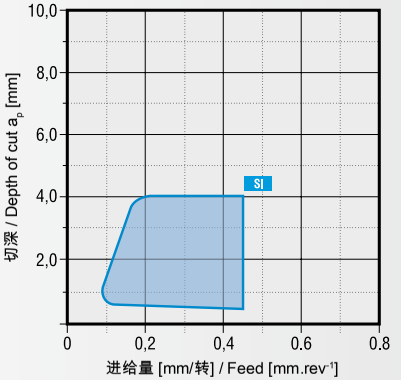

■ - 主要应用 / main application □ - 其他应用 / other applications □ - 有条件应用 / conditional applications

表 5
Table No. 5

刀片槽型 - 车削
GEOMETRY OF CUTTING INSERTS - TURNING

槽型 Geometry	夹紧名称 Clamping designation	工件材料组 Workpiece material group		P	M	K	N	S	H	应用示意图 Diagram of application	描述 Description	适用刀片 / Applied to inserts:
	S	车削 Turning										CCMT、SCMT、TCMT、VCMT、WCMT
UM	切削刃轮廓 Profile of cutting edge 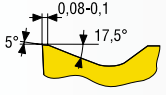		F	■	□	■				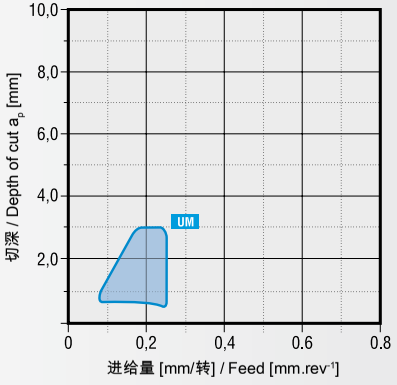	- 精车和精加工、钻孔 - 主要应用区域 – 加工材料组 P 和 K - 其他应用区域 - 加工材料组 M - 连续切削 - fine turning and finishing, driling - the main area of application – machined materials groups P and K - further area of application - machined materials group M - continuous cut	切削工况范围 / Range of cutting conditions:
			M									f: 0.08 - 0.25 [mm/转] / [mm.rev^{-1}]
			R									a_p: 0.5 - 3.0 [mm]

槽型 Geometry	夹紧名称 Clamping designation	工件材料组 Workpiece material group		P	M	K	N	S	H	应用示意图 Diagram of application	描述 Description	适用刀片 / Applied to inserts:
	S	车削 Turning										CCMT、DCMT、RCMT、SCMT、TCMT、VBMT、WCMT
UR	切削刃轮廓 Profile of cutting edge 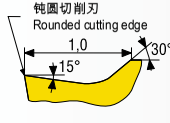		F	■	■	■	□			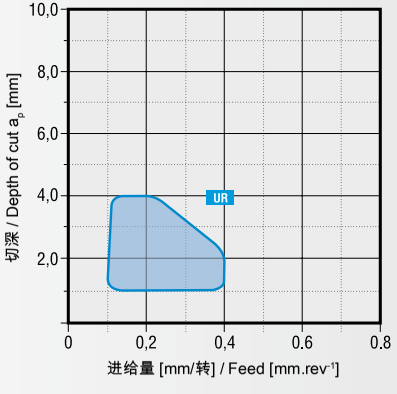	- 精车和精加工、钻孔 - 主要应用区域 – 加工材料组 P、M 和 K - 其他应用区域 - 加工材料组 N - 连续切削 - fine turning and finishing, driling - the main area of application – machined materials groups P, M and K - further area of application - machined materials group N - continuous cut	切削工况范围 / Range of cutting conditions:
			M	■	■	■	□					f: 0.10 - 0.40 [mm/转] / [mm.rev^{-1}]
			R									a_p: 1.0 - 4.0 [mm]

■ - 主要应用 / main application □ - 其他应用 / other applications □ - 有条件应用 / conditional applications

PRAMET

槽型 Geometry	夹紧名称 Clamping designation	工件材料组 Workpiece material group							应用示意图 Diagram of application	描述 Description	适用刀片 / Applied to inserts:
	S	车削 Turning	P	M	K	N	S	H			RCMT
UR (RCMT)	切削刃轮廓 Profile of cutting edge 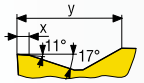	M	■	□	■				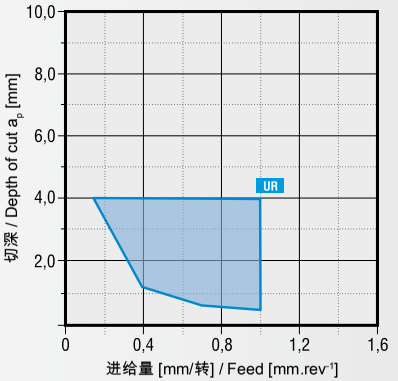	- 精加工 - 主要应用区域 – 加工材料组 P 和 K - 主要应用区域 – 加工材料组 M - 连续切削和断续切削 - finishing - the main area of application – machined materials groups P and K - the main area of application – machined materials groups M - continuous and interrupted cut	
		R	■	□	■						
		SR									

切削工况范围 / Range of cutting conditions:	
f	0.15 - 1.00 [mm/转] / [mm.rev^{-1}]
a_p	0.5 - 5.0 [mm]

槽型 Geometry	夹紧名称 Clamping designation	工件材料组 Workpiece material group							应用示意图 Diagram of application	描述 Description	适用刀片 / Applied to inserts:
	S	车削 Turning	P	M	K	N	S	H			CMW、DCMW、SCMW、RCMW、TCMW、VCMW
...W	切削刃轮廓 Profile of cutting edge 钝圆切削刃 Rounded cutting edge	F			■			■	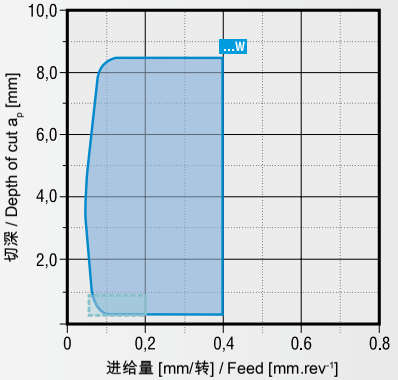	- 零前角负槽型，适用于精车、精加工和半精加工 - 主要应用区域 – 加工材料组 K 和 H - 连续切削和中等断续切削 - negative geometry with zero rake suitable for fine, finishing and semi-roughing - the main area of application – machined materials groups K and H - continuous and moderate interrupted cut	
		M			■			■			
		R			□			□			

切削工况范围 / Range of cutting conditions:	
f	0.10 - 0.40 [mm/转] / [mm.rev^{-1}]
a_p	0.4 - 8.4 [mm]

■ - 主要应用 / main application □ - 其他应用 / other applications □ - 有条件应用 / conditional applications

表 5
Table No. 5

刀片槽型 - 车削
GEOMETRY OF CUTTING INSERTS - TURNING

槽型 Geometry | 夹紧名称 Clamping designation **G** | 工件材料组 Workpiece material group | 应用示意图 Diagram of application | 描述 Description | 适用刀片 / Applied to inserts: LCMF

LCMF 13 F

切削刀轮廓
Profile of cutting edge

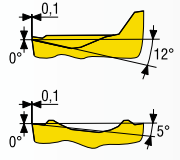

车削 Turning	P	M	K	N	S	H
F	■	□	■			
M	■	□	■			
R						

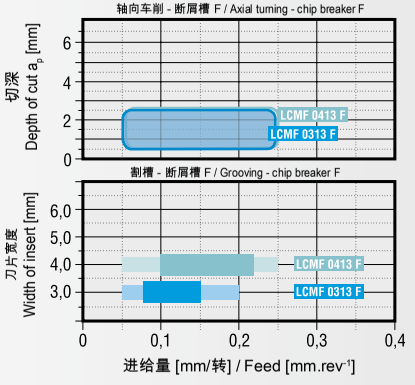

- 适合割槽和轴向车削的切削槽型
- 适用于加工材料组 P、K 和 M 的槽型
- 用于精车和精加工

- cutting geometry suitable for grooving and axial turning
- geometry suitable for machined materials groups P, K and M
- for fine turning and finishing

切削工况范围 / Range of cutting conditions:

f	参见示意图 / See diagram
a_p	参见示意图 / See diagram

槽型 Geometry | 夹紧名称 Clamping designation **G** | 工件材料组 Workpiece material group | 应用示意图 Diagram of application | 描述 Description | 适用刀片 / Applied to inserts: LCMF

LCMF 13 MP

切削刀轮廓
Profile of cutting edge

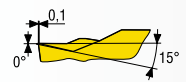

车削 Turning	P	M	K	N	S	H
F	■	□	■			
M	■	□	■			
R						

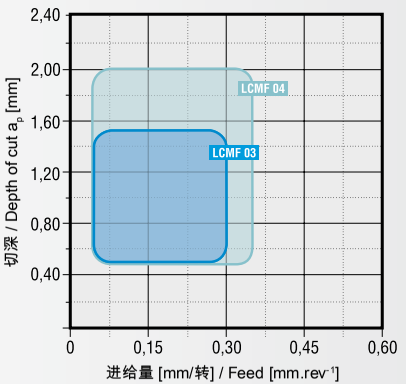

- 适用于槽型车削的槽型
- 适用于加工材料组 P、K 和 M 的槽型
- 用于精车和精加工

- cutting geometry suitable for copying
- geometry suitable for machined materials groups P, K and M
- for fine turning and finishing

切削工况范围 / Range of cutting conditions:

f	参见示意图 / See diagram
a_p	参见示意图 / See diagram

■ - 主要应用 / main application □ - 其他应用 / other applications □ - 有条件应用 / conditional applications

PRAMET

槽型 Geometry	夹紧名称 Clamping designation	工件材料组 Workpiece material group							应用示意图 Diagram of application	描述 Description	适用刀片 / Applied to inserts:
	G	车削 Turning	P	M	K	N	S	H			LCMF
LCMF 16 F	切削刃轮廓 Profile of cutting edge 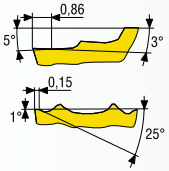	F	■	□	■				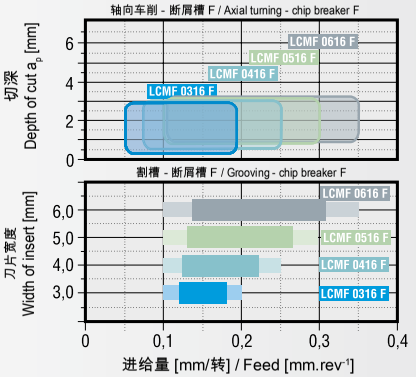	- 适合割槽以及轴向车削的切削槽型 - 适用于加工材料组 P、K 和 M 的槽型 - 用于精车和精加工 - cutting geometry suitable for grooving also axial turning - geometry suitable for machined materials groups P, K and M - for fine turning and finishing	
		M	■	□	■					切削工况范围 / Range of cutting conditions:	
		R								f	参见示意图 / See diagram
										a_p	参见示意图 / See diagram

槽型 Geometry	夹紧名称 Clamping designation	工件材料组 Workpiece material group							应用示意图 Diagram of application	描述 Description	适用刀片 / Applied to inserts:
	G	车削 Turning	P	M	K	N	S	H			LCMF
LCMF 16 M	切削刃轮廓 Profile of cutting edge 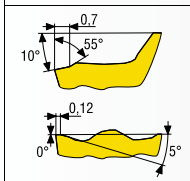	F	■	□	■				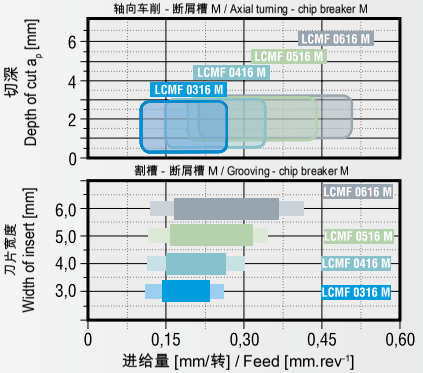	- 适合轴向车削以及割槽的切削槽型 - 适用于加工材料组 P、K 和 M 的槽型 - 用于精车和精加工 - cutting geometry suitable for axial turning also grooving - geometry suitable for machined materials groups P, K and M - for fine turning and finishing	
		M	■	□	■					切削工况范围 / Range of cutting conditions:	
		R								f	参见示意图 / See diagram
										a_p	参见示意图 / See diagram

■ - 主要应用 / main application □ - 其他应用 / other applications □ - 有条件应用 / conditional applications

表 5
Table No. 5

刀片槽型 - 车削
GEOMETRY OF CUTTING INSERTS - TURNING

槽型 Geometry | 夹紧名称 Clamping designation **G** | 工件材料组 Workpiece material group | 应用示意图 Diagram of application | 描述 Description | 适用刀片 / Applied to inserts: LCMF

LCMF 16 MP

切削刃轮廓
Profile of cutting edge

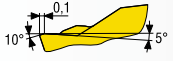

车削 Turning	P	M	K	N	S	H
F	■	□	■			
M	■	□	■			
R						

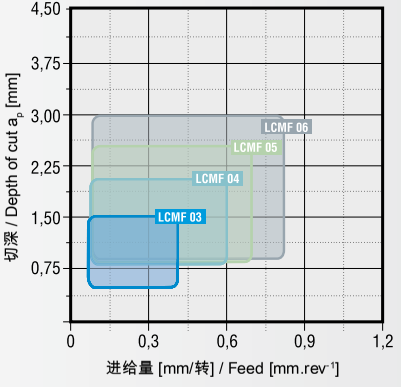

- 适用于槽型车削的槽型
- 适用于加工材料组 P、K 和 M 的槽型
- 用于精车和精加工

- cutting geometry suitable for copying
- geometry suitable for machined materials groups P, K and M
- for fine turning and finishing

切削工况范围 / Range of cutting conditions:

f	参见示意图 / See diagram
a_p	参见示意图 / See diagram

LCMF 20 F1

切削刃轮廓
Profile of cutting edge

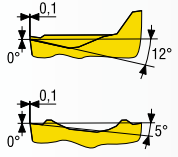

车削 Turning	P	M	K	N	S	H
F	■	■	□			
M	■	■	□			
R						

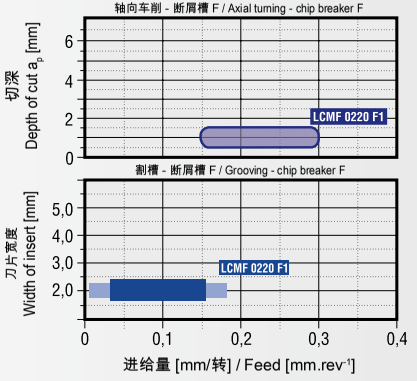

- 适合割槽和轴向车削的切削槽型
- 适用于加工材料组 P、K 和 M 的槽型
- 用于精车和精加工

- cutting geometry suitable for grooving and axial turning
- geometry suitable for machined materials groups P, Kand M
- for fine turning and finishing

切削工况范围 / Range of cutting conditions:

f	参见示意图 / See diagram
a_p	参见示意图 / See diagram

■ - 主要应用 / main application □ - 其他应用 / other applications □ - 有条件应用 / conditional applications

PRAMET

槽型 Geometry	夹紧名称 Clamping designation	工件材料组 Workpiece material group							应用示意图 Diagram of application	描述 Description	适用刀片 / Applied to inserts: LCMX
	G	车削 Turning	P	M	K	N	S	H			
LCMX	切削刃轮廓 Profile of cutting edge 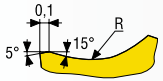	F	■	□	■				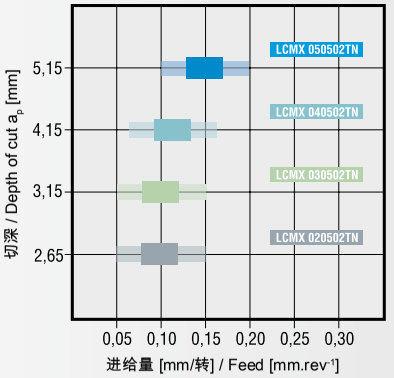	- 切断和割槽 - 主要应用区域 – 加工材料组 P 和 K - 其他应用区域 - 加工材料组 M - 连续切削和中等断续切削 - parting and grooving - the main area of application – machined materials groups P and K - further area of application - machined materials M - continuous and moderate interrupted cut	切削工况范围 / Range of cutting conditions:
		M	■	□	■						
		R									

f	参见示意图 / See diagram
a_p	参见示意图 / See diagram

槽型 Geometry	夹紧名称 Clamping designation	工件材料组 Workpiece material group							应用示意图 Diagram of application	描述 Description	适用刀片 / Applied to inserts: LFMX
	X	车削 Turning	P	M	K	N	S	H			
LFMX F1	切削刃轮廓 Profile of cutting edge	F	■	■	□		□		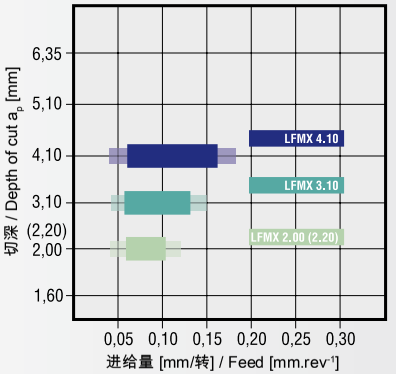	- 通用切削槽型，切削阻力低 - 切断和割槽 - 主要应用区域 – 加工材料组 P 和 M - 其他应用区域 - 加工材料组 K - 主要应用区域 – 加工材料组 S - universal cutting geometry characterized by low cutting resistance - parting and grooving - the main area of application – machined materials groups P and M - further area of application - machined materials K - the main area of application – machined materials groups S	切削工况范围 / Range of cutting conditions:
		M	■	■	□		□				
		R									

f	参见示意图 / See diagram
a_p	参见示意图 / See diagram

■ - 主要应用 / main application □ - 其他应用 / other applications □ - 有条件应用 / conditional applications

表 5
Table No. 5

刀片槽型 - 车削
GEOMETRY OF CUTTING INSERTS - TURNING

槽型 Geometry	夹紧名称 Clamping designation	工件材料组 Workpiece material group	应用示意图 Diagram of application	描述 Description	适用刀片 / Applied to inserts: LFMX
LFMX F2	X	车削 Turning: F ■ P, □ M, ■ K, N, □ S, □ H M ■ P, □ M, ■ K, N, □ S, □ H R	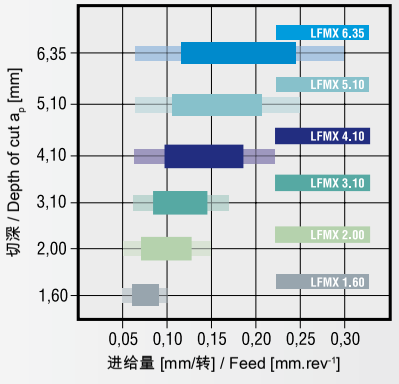	- 高通用切削槽型，切削阻力低 - 切断和割槽 - 主要应用区域 – 加工材料组 P 和 K - 其他应用区域 - 加工材料组 M - 主要应用区域 – 加工材料组 S 和 H - 也适用连续切削 - high universal cutting geometry characterized by low cutting resistance - parting and grooving - the main area of application – machined materials groups P and K - further area of application - machined materials M - the main area of application – machined materials groups S and H - also continuous cut	
	切削刃轮廓 Profile of cutting edge			切削工况范围 / Range of cutting conditions:	
	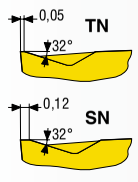			f	参见示意图 / See diagram
				a_p	参见示意图 / See diagram

槽型 Geometry	夹紧名称 Clamping designation	工件材料组 Workpiece material group	应用示意图 Diagram of application	描述 Description	适用刀片 / Applied to inserts: LFMX
LFMX M2	X	车削 Turning: F ■ P, ■ M, □ K, N, □ S, □ H M ■ P, ■ M, □ K, N, □ S, □ H R	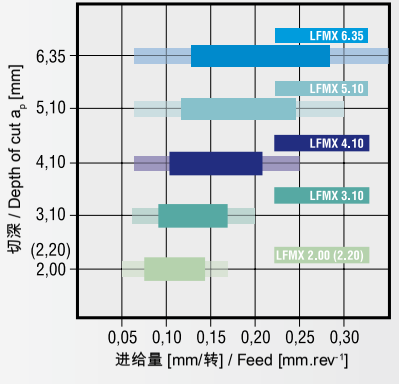	- 高通用切削槽型，切削阻力极低 - 切断和割槽 - 主要应用区域 – 加工材料组 P 和 M - 其他应用区域 - 加工材料组 K 和 S - 主要应用区域 – 加工材料组 N 和 H - 也适用于中等断续切削 - high universal cutting geometry characterized by very low cutting resistance - parting and grooving - the main area of application – machined materials groups P and M - further area of application - machined materials K and S - the main area of application – machined materials groups N and H - also for moderate interrupted cut	
	切削刃轮廓 Profile of cutting edge			切削工况范围 / Range of cutting conditions:	
	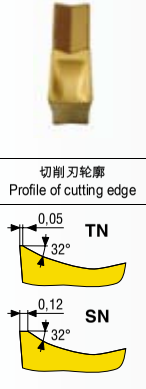			f	参见示意图 / See diagram
				a_p	参见示意图 / See diagram

■ - 主要应用 / main application □ - 其他应用 / other applications □ - 有条件应用 / conditional applications

PRAMET

几何 Geometry	夹紧名称 Clamping designation X	工件材料组 Workpiece material group / 车削 Turning	P	M	K	N	S	H	应用示意图 Diagram of application	描述 Description	适用刀片 / Applied to inserts: LFUX
LFUX		F	■	▨	■				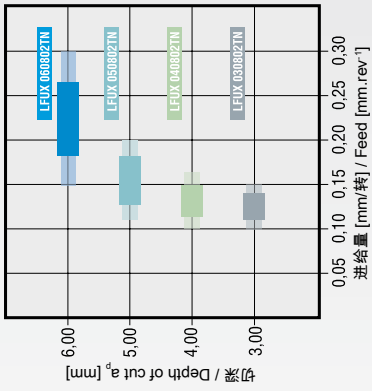	- 切断和割槽 - 主要应用区域 - 加工材料组 P 和 K - 其他应用区域 - 加工材料组 M - 连续切削和中等断续切削	
	切削刀轮廓 Profile of cutting edge	M		■	▨					- parting and grooving - the main area of application – machined materials groups P and K - further area of application - machined materials M - continuous and moderate interrupted cut	
	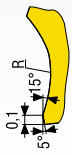	R	▨	▨						切削工况范围 / Range of cutting conditions:	
										f	参见示意图 / See diagram
										a_p	参见示意图 / See diagram

■ - 主要应用 / main application ▨ - 其他应用 / other applications □ - 有条件应用 / conditional applications

刀片槽型 - 重型粗加工
GEOMETRY OF CUTTING INSERTS - HEAVY ROUGHING

PRAMET

在 Pramet 刀具分类中，其中一个主要部分就是用于极重粗加工的刀具，在刀片的切削刃上会产生极为特殊的负荷。由于切屑的横截面大，所以材料的去除量大，即每分钟的材料切除率高 (粗加工时 Q = 300 - 600 cm^3/分钟，重型粗加工时 Q = 800 - 3000 cm^3/分钟)。

在切屑成形过程中，在主要的塑性变形区域，大量加工材料发生变形，从而产生热量并在切削刃上产生高热负荷。同时产生大的切削力 (粗加工时 F_z ≈ 5 000 - 10 000 N，重型粗加工时 F_z ≈ 10 000 - 60 000 N)，影响切削刃的周围区域。

这些工况会在切削刃上产生塑性变形危险，可能会导致切削刃整个损坏 (由于切削刃硬度丧失而导致“烧伤”)。对于可转位刀片，在粗加工和重型粗加工中，如果是非断续切削，就可能在切削刃上产生这样的负荷。

在粗加工进行断续切削时，除了高切削力和高温，还必须考虑其变化性，这会在切削刃上产生周期性的机械和热冲击负荷。在机加工过程中，还需要注意铸件和锻件表层中的硬夹杂物，这会导致切削刃的表面磨损危险，甚至出现严重的表面有深刮痕的后刀面磨损。

要选择最佳的可转位刀片牌号，主要看切削特点，是连续切削还是断续切削。

在非断续切削过程中，切削刃必须能抵抗高切削力和高切削温度的主要影响。这意味着快速磨损和塑性变形危险，甚至会发生切削刃“烧伤”并致整体塑性断裂。

在这种情况下，需要使用具有极低钴含量的高热稳定性牌号。这种牌号的强度较低，能抵抗由于切削力作用导致的刀片刃口脆性崩裂。Pramet 刀具采用较厚的刀片和切削刃上稳定的倒棱设计、大刀尖圆角半径 r_e 和选择具有最大夹角 e_r 的刀片形状作为解决方案。

在断续切削过程中，切削刃上的热负荷通常较低。因为在切削刃“切削空气”时切削刃处于冷却阶段。所以形成塑性变形的危险较低。然而，由于这种工况下切削刃承受变化的周期性机械和热应力负荷，因此有刃口脆性崩裂的危险。

在实际加工中，经常采用更硬牌号的刀片 (钴含量较高) 以便采用更大的进给量，这样做是不对的。

下面介绍我们为重型粗加工而专门开发的槽型。

One of the predominant part of Pramet Tools assortment are tools for very heavy roughing which causes very specific load of cutting edge of cutting insert. With the respect to big cross-section of chip is removed big volume of material – high metal removal rate per minute (at roughing Q = 300 - 600 $cm^3.min^{-1}$, at heavy roughing **Q = 800 - 3000 $cm^3.min^{-1}$**).

During chip forming is deformed big volume of machined material in area of primary plastic deformation. This causes heat generation and high thermal load of cutting edge. At the same moment arise big cutting forces (F_z ≈ 5 000 - 10 000 N at roughing and **F_z ≈ 10 000 - 60 000 N** at heavy roughing), affecting in contiguity of cutting edge.

These conditions cause risk of formation of plastic deformation on edge, which can cause its total destruction („burn“ as a result of loss of hardness of cutting edge). In that way we can characterize the load of cutting edge of indexable cutting insert at roughing and heavy roughing with uninterrupted cut.

At roughing with interrupted cut besides high values of cutting forces and high temperature you must consider theirs variability, which causes *periodical load of cutting edge with mechanical and thermal shock*. The other complication during machining are hard inclusions in skin of castings and forgings, which cause the risk of abrasion of cutting edge or even extreme flank wear in form of deep scratches.

To choose the optimum grade of indexable cutting insert the main criteria is *the character of cut – uninterrupted* or *interrupted*.

The cutting edge must withstand mainly influence of high cutting force and high cutting temperature *during uninterrupted cut*. It means risk of fast wear and plastic deformation and consequently total plastic break of cutting edge „burn“.

In that case is necessary to use grade with high limit of thermal stability, it means with lowest content of cobalt. Such grade has lower strength – resistance against brittle chipping of cutting insert due to action of cutting forces. Pramet Tools solved this problem by bigger thickness of cutting insert and design of stabilization top land on cutting edge, big corner radius r_ε and choice of shape of cutting insert with the biggest included angle ε_r.

The thermal load of cutting edge is usually lower during interrupted cut. The reason is the cooling in phase when cutting edge „cuts the air“. That is why the risk of formation of plastic deformation is lower. However raises risk of brittle chipping of cutting edge due to variable-periodical load of cutting edge by mechanical and thermal stresses.

The rule often used in practice that is necessary to use tougher grade of cutting insert (with higher content of Co) for higher feed *is not true*.

You find our offer of geometries developed specially **for heavy roughing** in next passage.

表 6
Table No. 6

刀片槽型 - 重型粗加工
GEOMETRY OF CUTTING INSERTS - HEAVY ROUGHING

槽型 Geometry	夹紧名称 Clamping designation	工件材料组 Workpiece material group		P	M	K	N	S	H	应用示意图 Diagram of application	描述 Description	适用刀片 / Applied to inserts:
923	P, M, D	车削 Turning	M							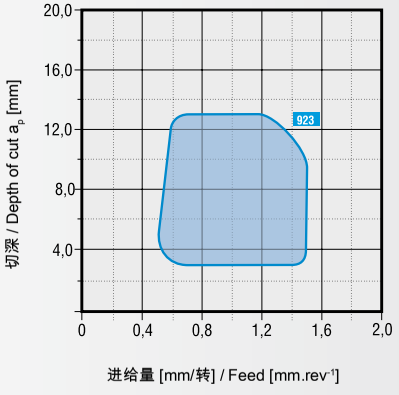	- 使用范围更宽的槽型，从重型粗加工至半精加工 - 主要应用区域 – 加工材料组 P - 其他应用区域 - 加工材料组 M 和 K - 连续切削和断续切削 - widerange geometry used from heavy roughing to semi-roughing - the main area of application – machined materials groups P - further area of application - machined materials group M and K - continuous and interrupted cut	CNMM, SNMM
			R	■	□	□						
	切削刃轮廓 Profile of cutting edge		SR	■	□	□					切削工况范围 / Range of cutting conditions:	
	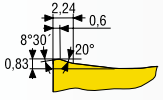										f	0.45 - 1.50 [mm/转] / [mm.rev^{-1}]
											a_p	3.0 - 13.0 [mm]

槽型 Geometry	夹紧名称 Clamping designation	工件材料组 Workpiece material group		P	M	K	N	S	H	应用示意图 Diagram of application	描述 Description	适用刀片 / Applied to inserts:
HR	P, M	车削 Turning	M	■	□	■		□		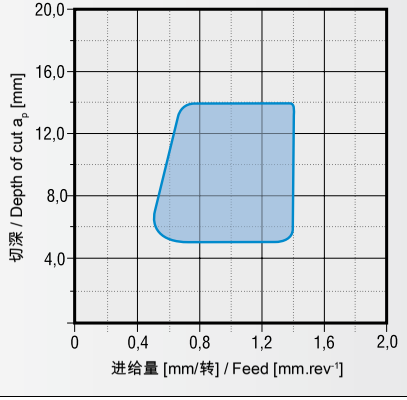	- 粗加工至重型粗加工 - 主要应用区域 – 加工材料组 P 和 K - 其他应用区域 - 加工材料组 M - 有条件应用 - 加工材料组 S - 连续切削和断续切削 - roughing up to heavy roughing - the main area of application – machined materials groups P and K - further area of application - machined materials group M - conditional application - machined materials group S - continuous and interrupted cut	CNMM, SNMM, TNMM
			R	■	□	■		□				
	切削刃轮廓 Profile of cutting edge		SR	■	□	■		□			切削工况范围 / Range of cutting conditions:	
	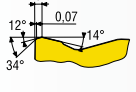										f	0.50 - 1.40 [mm/转] / [mm.rev^{-1}]
											a_p	5.0 - 14.0 [mm]

■ - 主要应用 / main application □ - 其他应用 / other applications □ - 有条件应用 / conditional applications

PRAMET

LNMX 501432

槽型 Geometry

夹紧名称
Clamping designation
P

切削刃轮廓
Profile of cutting edge

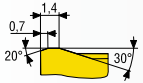

工件材料组
Workpiece material group

车削 Turning	P	M	K	N	S	H
M						
R						
SR	■	■	■			

应用示意图
Diagram of application

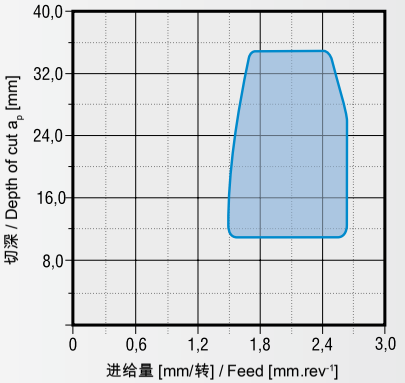

描述
Description

适用刀片 / Applied to inserts:
LNMX 50

- 重型粗加工
- 主要应用区域 – 加工材料组 P、M 和 K
- 稳定的外围负倒棱
- 连续切削和断续切削

- heavy roughing
- the main area of application – machined materials groups P. M and K
- stable negative peripheral top land
- continuous and interrupted cut

切削工况范围 / Range of cutting conditions:

f	1.50 - 2.60 [mm/转] / [mm.rev^{-1}]
a_p	10.0 - 35.0 [mm]

LNUX – DF

槽型 Geometry

夹紧名称
Clamping designation
P

切削刃轮廓
Profile of cutting edge

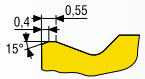

工件材料组
Workpiece material group

车削 Turning	P	M	K	N	S	H
M						
R	■	□	■			□
SR	■	□	■			□

应用示意图
Diagram of application

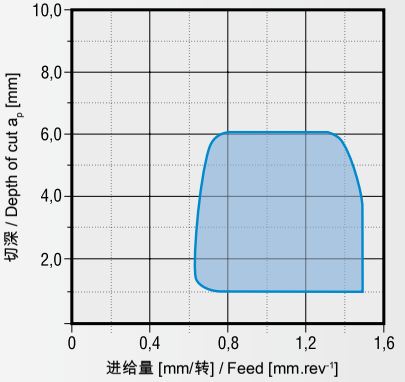

描述
Description

适用刀片 / Applied to inserts:
LNUX 19

- 粗加工至重型粗加工
- 主要应用区域 – 加工材料组 P 和 K
- 其他应用区域 - 加工材料组 M
- 有条件应用 - 加工材料组 H
- 连续切削和断续切削

- roughing up to heavy roughing
- the main area of application – machined materials groups P and K
- further area of application - machined materials group M
- conditional application - machined materials group H
- continuous and interrupted cut

切削工况范围 / Range of cutting conditions:

f	0.60 - 1.50 [mm/转] / [mm.rev^{-1}]
a_p	1.0 - 6.0 [mm]

■ - 主要应用 / main application □ - 其他应用 / other applications □ - 有条件应用 / conditional applications

表 6
Table No. 6

刀片槽型 - 重型粗加工
GEOMETRY OF CUTTING INSERTS - HEAVY ROUGHING

槽型 Geometry: **LNUX – DM**

夹紧名称 Clamping designation: **P**

切削刃轮廓
Profile of cutting edge

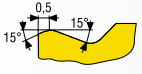

工件材料组 Workpiece material group	P	M	K	N	S	H
M (车削 Turning)						
R (车削 Turning)	■	□	■			□
SR (车削 Turning)	■	□	■			□

应用示意图
Diagram of application

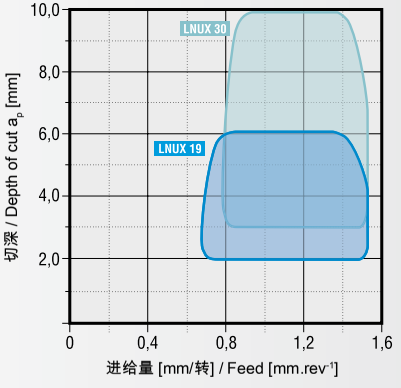

描述 Description

适用刀片 / Applied to inserts:
LNUX 19. LNUX 30

- 粗加工至重型粗加工
- 主要应用区域 – 加工材料组 P 和 K
- 其他应用区域 - 加工材料组 M
- 有条件应用 - 加工材料组 H
- 连续切削和断续切削

- roughing up to heavy roughing
- the main area of application – machined materials groups P and K
- further area of application - machined materials group M
- conditional application - machined materials group H
- continuous and interrupted cut

切削工况范围 / Range of cutting conditions:

f	0.70 - 1.50 [mm/转] / [mm.rev^{-1}]
a_p	2.0 - 10.0 [mm]

槽型 Geometry: **LNUX 40 – 03. LNUX 50 – 00**

夹紧名称 Clamping designation: **P**

切削刃轮廓
Profile of cutting edge

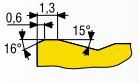

工件材料组 Workpiece material group	P	M	K	N	S	H
M (车削 Turning)						
R (车削 Turning)						
SR (车削 Turning)	■	■	■			

应用示意图
Diagram of application

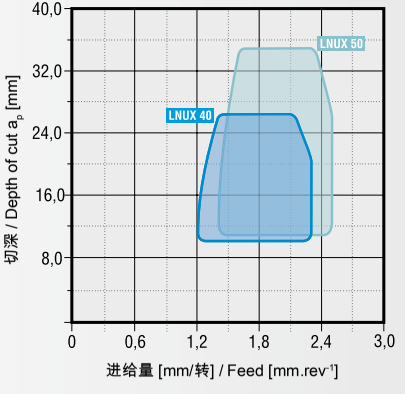

描述 Description

适用刀片 / Applied to inserts:
LNUX 40. LNUX 50

- 重型粗加工
- 主要应用区域 – 加工材料组 P、M 和 K
- 稳定的外围负倒棱
- 连续切削和断续切削

- heavy roughing
- the main area of application – machined materials groups P. M and K
- stable negative peripheral top land
- continuous and interrupted cut

切削工况范围 / Range of cutting conditions:

f	1.20 - 2.50 [mm/转] / [mm.rev^{-1}]
a_p	10.0 - 36.0 [mm]

■ - 主要应用 / main application □ - 其他应用 / other applications □ - 有条件应用 / conditional applications

PRAMET

LNUX 40 – 1129002

槽型 Geometry

夹紧名称
Clamping designation
P

切削刃轮廓
Profile of cutting edge

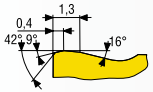

工件材料组
Workpiece material group

车削 Turning	P	M	K	N	S	H
M						
R						
SR	■	■	■			

应用示意图
Diagram of application

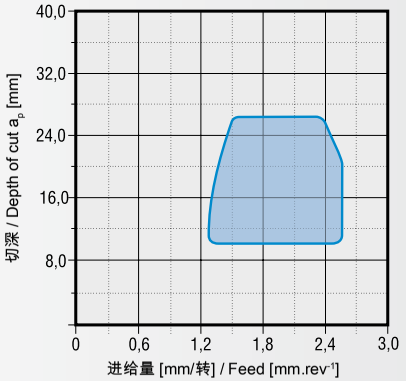

描述
Description

适用刀片 / Applied to inserts:
LNUX 40

- 重型粗加工
- 主要应用区域 – 加工材料组 P、M 和 K
- 稳定的外围负倒棱
- 连续切削和断续切削

- heavy roughing
- the main area of application – machined materials groups P. M and K
- stable negative peripheral top land
- continuous and interrupted cut

切削工况范围 / Range of cutting conditions:

f	1.30 - 2.60 [mm/转] / [mm.rev^{-1}]
a_p	10.0 - 27.0 [mm]

RCMX – 351

槽型 Geometry

夹紧名称
Clamping designation
P

切削刃轮廓
Profile of cutting edge

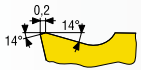

工件材料组
Workpiece material group

车削 Turning	P	M	K	N	S	H
M						
R	■	□	■			
SR	■	□	■			

应用示意图
Diagram of application

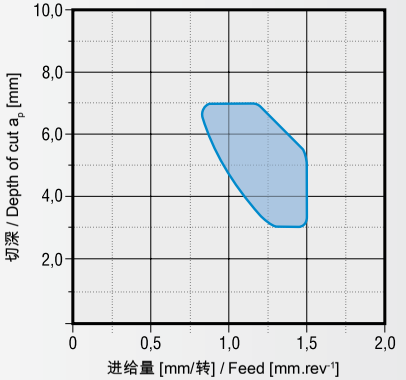

描述
Description

适用刀片 / Applied to inserts:
RCMX

- 粗加工至重型粗加工
- 主要应用区域 – 加工材料组 P 和 K
- 有条件应用 - 加工材料组 M
- 连续切削和断续切削

- roughing up to heavy roughing
- the main area of application – machined materials groups P and K
- conditional application - machined materials group M
- continuous and interrupted cut

切削工况范围 / Range of cutting conditions:

f	0.80 - 1.50 [mm/转] / [mm.rev^{-1}]
a_p	3.0 - 7.0 [mm]

■ - 主要应用 / main application □ - 其他应用 / other applications □ - 有条件应用 / conditional applications

表 6
Table No. 6

刀片槽型 - 重型粗加工
GEOMETRY OF CUTTING INSERTS - HEAVY ROUGHING

槽型 Geometry | 夹紧名称 Clamping designation **P** | 工件材料组 Workpiece material group | 应用示意图 Diagram of application | 描述 Description | 适用刀片 / Applied to inserts: **RCMX**

RCMX – 352

切削刃轮廓
Profile of cutting edge

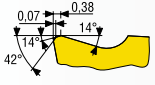

车削 Turning	P	M	K	N	S	H
M						
R	■	□	■			
SR	■	□	■			

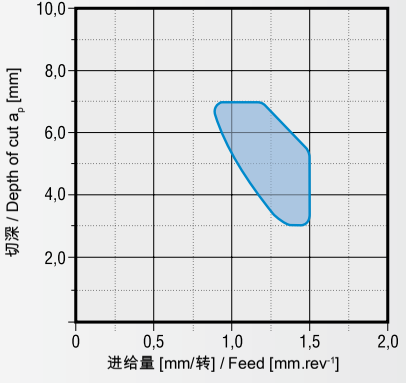

- 粗加工至重型粗加工
- 主要应用区域 – 加工材料组 P 和 K
- 有条件应用 - 加工材料组 M
- 连续切削和断续切削

- roughing up to heavy roughing
- the main area of application – machined materials groups P and K
- conditional application - machined materials group M
- continuous and interrupted cut

切削工况范围 / Range of cutting conditions:

f	0.80 - 1.50 [mm/转] / [mm.rev^{-1}]
a_p	3.0 - 7.0 [mm]

槽型 Geometry | 夹紧名称 Clamping designation **P** | 工件材料组 Workpiece material group | 应用示意图 Diagram of application | 描述 Description | 适用刀片 / Applied to inserts: **RCMX**

RCMX – 361

切削刃轮廓
Profile of cutting edge

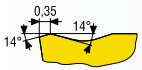

车削 Turning	P	M	K	N	S	H
M						
R	■	□	■			
SR	■	□	■			

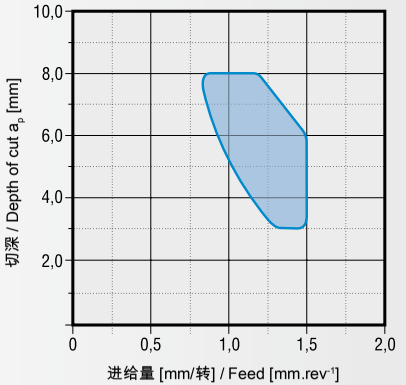

- 粗加工至重型粗加工
- 主要应用区域 – 加工材料组 P 和 K
- 有条件应用 - 加工材料组 M
- 连续切削和断续切削

- roughing up to heavy roughing
- the main area of application – machined materials groups P and K
- conditional application - machined materials group M
- continuous and interrupted cut

切削工况范围 / Range of cutting conditions:

f	0.80 - 1.50 [mm/转] / [mm.rev^{-1}]
a_p	3.0 - 8.0 [mm]

■ - 主要应用 / main application □ - 其他应用 / other applications □ - 有条件应用 / conditional applications

PRAMET

RCMX – 37

槽型 Geometry	夹紧名称 Clamping designation	工件材料组 Workpiece material group	P	M	K	N	S	H
RCMX – 37	P	M						
		R	■	□	■			
		SR	■	□	■			

切削刃轮廓
Profile of cutting edge

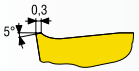

应用示意图
Diagram of application

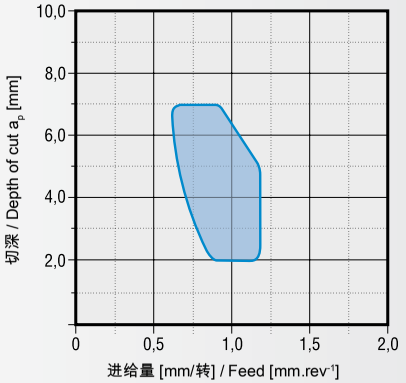

描述 Description: 适用刀片 / Applied to inserts: **RCMX**

- 粗加工至重型粗加工
- 主要应用区域 – 加工材料组 P 和 K
- 有条件应用 - 加工材料组 M
- 连续切削和断续切削

- roughing up to heavy roughing
- the main area of application – machined materials groups P and K
- conditional application - machined materials group M
- continuous and interrupted cut

切削工况范围 / Range of cutting conditions:

f	0.60 - 1.20 [mm/转] / [mm.rev^{-1}]
a_p	2.0 - 7.0 [mm]

RNMG – 81

槽型 Geometry	夹紧名称 Clamping designation	工件材料组 Workpiece material group	P	M	K	N	S	H
RNMG – 81	P	M						
		R	■	□	■			
		SR	■	□	■			

切削刃轮廓
Profile of cutting edge

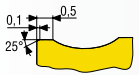

应用示意图
Diagram of application

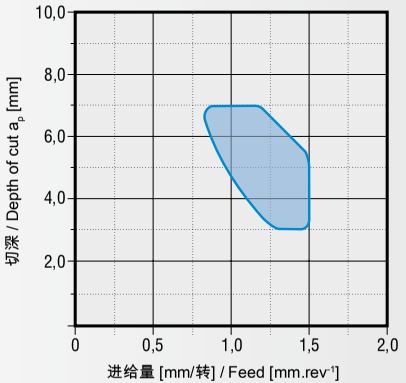

描述 Description: 适用刀片 / Applied to inserts: **RNMG**

- 粗加工至重型粗加工
- 主要应用区域 – 加工材料组 P 和 K
- 有条件应用 - 加工材料组 M
- 连续切削和断续切削

- roughing up to heavy roughing
- the main area of application – machined materials groups P and K
- conditional application - machined materials group M
- continuous and interrupted cut

切削工况范围 / Range of cutting conditions:

f	0.80 - 1.20 [mm/转] / [mm.rev^{-1}]
a_p	3.0 - 7.0 [mm]

■ - 主要应用 / main application □ - 其他应用 / other applications □ - 有条件应用 / conditional applications

表 6
Table No. 6

刀片槽型 - 重型粗加工
GEOMETRY OF CUTTING INSERTS - HEAVY ROUGHING

槽型 Geometry: **SR**

夹紧名称 Clamping designation: **P**

切削刀轮廓
Profile of cutting edge

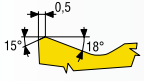

工件材料组 Workpiece material group / 车削 Turning	P	M	K	N	S	H
M						
R	■	■	■			
SR	■	■	■			

应用示意图
Diagram of application

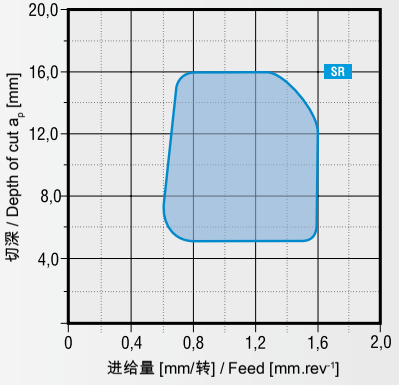

描述 Description

适用刀片 / Applied to inserts:
SNMM, SNMX

- 重型粗加工
- 主要应用区域 – 加工材料组 P、M 和 K
- 稳定的外围负倒棱
- 连续切削和断续切削

- heavy roughing
- the main area of application – machined materials groups P, M and K
- stable negative peripheral top land
- continuous and interrupted cut

切削工况范围 / Range of cutting conditions:

f	0.70 - 1.60 [mm/转] / [mm.rev^{-1}]
a_p	5.0 - 16.0 [mm]

槽型 Geometry: **TNMM – 90**

夹紧名称 Clamping designation: **P**

切削刀轮廓
Profile of cutting edge

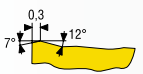

工件材料组 Workpiece material group / 车削 Turning	P	M	K	N	S	H
M						
R	■	■	□		□	
SR	■	■	□		□	

应用示意图
Diagram of application

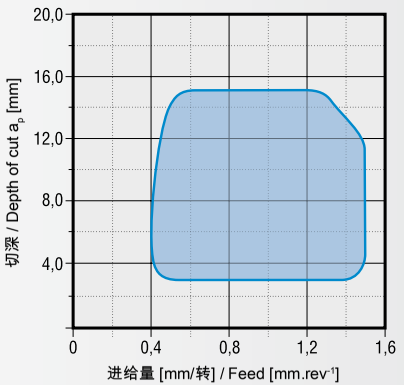

描述 Description

适用刀片 / Applied to inserts:
TNMM

- 粗加工和半精加工
- 主要应用区域 – 加工材料组 P 和 M
- 其他应用区域 - 加工材料组 K
- 有条件应用 - 加工材料组 S
- 连续切削和断续切削

- semi-roughing and roughing
- the main area of application – machined materials groups P and M
- further area of application - machined materials group K
- conditional application - machined materials group S
- continuous and interrupted cut

切削工况范围 / Range of cutting conditions:

f	0.40 - 1.50 [mm/转] / [mm.rev^{-1}]
a_p	3.0 - 15.0 [mm]

■ - 主要应用 / main application □ - 其他应用 / other applications □ - 有条件应用 / conditional applications

PRAMET

槽型 Geometry	夹紧名称 Clamping designation	工件材料组 Workpiece material group							应用示意图 Diagram of application	描述 Description	适用刀片 / Applied to inserts:
	S	车削 Turning	P	M	K	N	S	H			RCUM
RCUM	切削刃轮廓 Profile of cutting edge 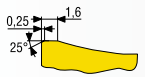	M							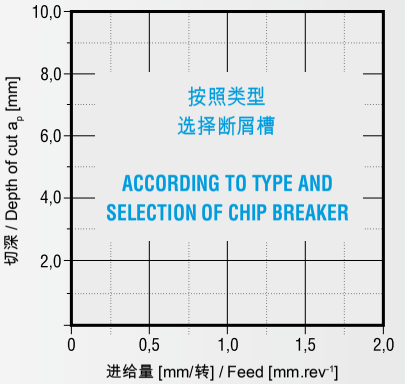	- 粗加工至重型粗加工 - 主要应用区域 – 加工材料组 P 和 K - 有条件应用 - 加工材料组 M - 连续切削和断续切削 - roughing up to heavy roughing - the main area of application – machined materials groups P and K - conditional application - machined materials group M - continuous and interrupted cut	
		R	■	□	■						
		SR	■	□	■						

切削工况范围 / Range of cutting conditions:	
f	0.90 - 1.60 [mm/转] / [mm.rev-1]
a_p	2.0 - 8.0 [mm]

槽型 Geometry	夹紧名称 Clamping designation	工件材料组 Workpiece material group							应用示意图 Diagram of application	描述 Description	适用刀片 / Applied to inserts:
	S	车削 Turning	P	M	K	N	S	H			SCMT
SCMT – DR4	切削刃轮廓 Profile of cutting edge 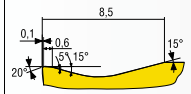	M							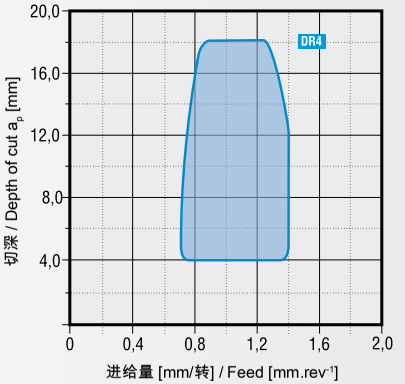	- 重型粗加工 - 主要应用区域 – 加工材料组 P 和 K - 其他应用区域 - 加工材料组 M - 稳定的外围倒棱 - 连续切削和断续切削 - heavy roughing - the main area of application – machined materials groups P and K - further area of application - machined materials group M - stable peripheral top land - continuous and interrupted cut	
		R	■	□	■						
		SR	■	□	■						

切削工况范围 / Range of cutting conditions:	
f	0.70 - 1.40 [mm/转] / [mm.rev-1]
a_p	4.0 - 18.0 [mm]

■ - 主要应用 / main application □ - 其他应用 / other applications □ - 有条件应用 / conditional applications

表 6
Table No. 6

刀片槽型 - 重型粗加工
GEOMETRY OF CUTTING INSERTS - HEAVY ROUGHING

槽型 Geometry | 夹紧名称 Clamping designation **S** | 工件材料组 Workpiece material group | 应用示意图 Diagram of application | 描述 Description | 适用刀片 / Applied to inserts: **SCMT**

SCMT – OR

切削刃轮廓
Profile of cutting edge

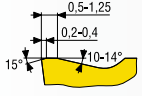

车削 Turning	P	M	K	N	S	H
M						
R	■	■	□		□	
SR	■	■	□		□	

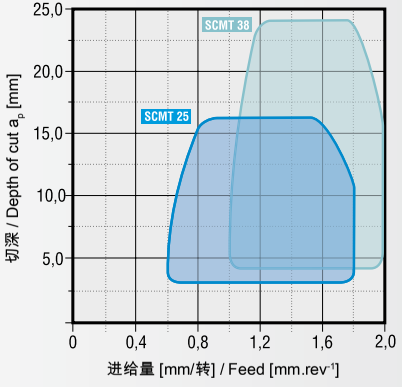

- 粗加工至重型粗加工
- 主要应用区域 – 加工材料组 P 和 K
- 其他应用区域 - 加工材料组 M
- 有条件应用 - 加工材料组 S
- 连续切削和断续切削

- roughing up to heavy roughing
- the main area of application – machined materials groups P and K
- further area of application - machined materials group M
- conditional application - machined materials group S
- continuous and interrupted cut

切削工况范围 / Range of cutting conditions:

f	0.60 - 2.00 [mm/转] / [mm.rev^{-1}]
a_p	3.0 - 24.0 [mm]

槽型 Geometry | 夹紧名称 Clamping designation **S** | 工件材料组 Workpiece material group | 应用示意图 Diagram of application | 描述 Description | 适用刀片 / Applied to inserts: **SCMT**

SCMT – SR

切削刃轮廓
Profile of cutting edge

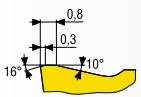

车削 Turning	P	M	K	N	S	H
M						
R	■	■	■			
SR	■	■	■			

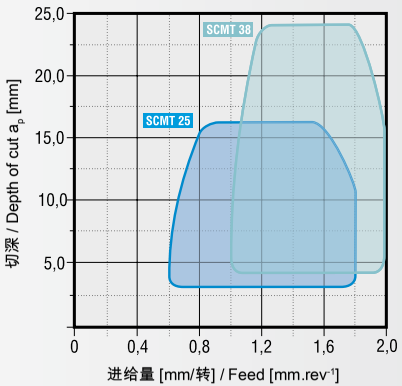

- 粗加工至重型粗加工
- 主要应用区域 – 加工材料组 P、M 和 K
- 稳定的外围负倒棱
- 连续切削和断续切削

- roughing up to heavy roughing
- the main area of application – machined materials groups P, M and K
- stable negative peripheral top land
- continuous and interrupted cut

切削工况范围 / Range of cutting conditions:

f	0.60 - 2.0 [mm/转] / [mm.rev^{-1}]
a_p	3.0 - 24.0 [mm]

■ - 主要应用 / main application □ - 其他应用 / other applications □ - 有条件应用 / conditional applications

PRAMET

名称和显微结构 Designation and microstructure	应用范围 Application areas	工件材料组 Workpiece Material Group	牌号说明和推荐应用 Grade description and recommended application

6605

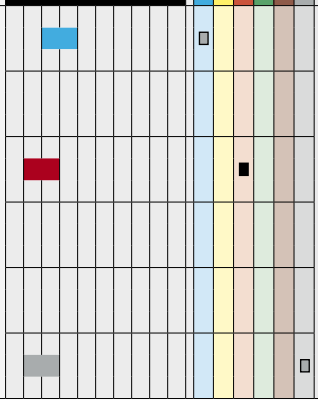

描述 / Description

- 6000 系列中最耐磨的牌号
- 独特的双涂层 – 使用 MTCVD 和 PVD 组合方法，主涂层氧化铝 (Al_2O_3)
- 适用于加工材料组 K、P 和 H
- 适用于从精加工至粗车的连续切削
- 高切削速度 (干式车削)
- 用于良好的切削工况

- the most wear resistant grade among 6000 grades
- unique dual coating – combination of MTCVD and PVD methods, main layer Al_2O_3
- suitable for machining of materials groups K, P and H
- for finishing up to roughing turning with continuous cut
- high cutting speeds (dry turning)
- for good cutting conditions

6615

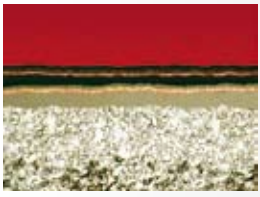

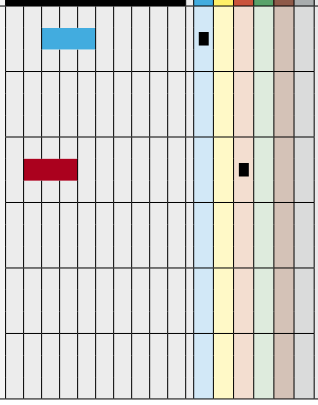

描述 / Description

- 功能梯度基材，低钴含量
- 独特的双涂层 – 使用 MTCVD 和 PVD 组合方法，主涂层 TiCN
- 适用于加工材料组 P 和 K，有条件用于材料组 M
- 适用于精加工至粗车
- 较高的切削速度
- 用于良好的连续切削工况，同时有条件用于中等断续切削工况

- functional gradient substrate with low content of cobalt
- unique dual coating – combination of MTCVD and PVD methods, main layer TiCN
- suitable for machining of materials groups P, K and conditionally M
- for finishing up to roughing turning
- higher cutting speeds
- for good continuous and conditionally also moderate interrupted cut

6620

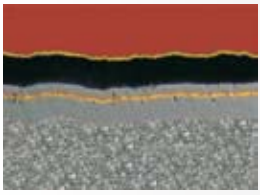

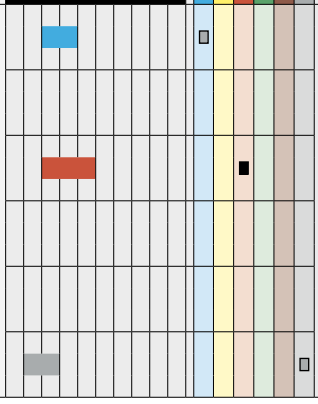

描述 / Description

- 亚微米基材，不含立方碳化硅
- 厚 MTCVD 涂层，主涂层为氧化铝 (Al_2O_3)
- 精加工至粗加工
- 主要用于加工材料组 K，也适用于材料组 P 和 H
- 中等至更高切削速度
- 良好切削工况下的连续切削

- submicron substrate without cubical carbides
- thick layer of MTCVD coating with main layer of Al_2O_3
- finishing up to roughing
- mainly for materials group K, suitable also for groups P and H
- medium and higher cutting speeds
- continuous cut at good cutting conditions

■ - 主要应用 / main application　　▩ - 其他应用 / other applications　　□ - 有条件应用 / conditional applications

表 7
Table No. 7

带涂层车削牌号 – 6000 系列
COATED TURNING GRADES – LINE 6000

名称和显微结构 Designation and microstructure	应用范围 Application areas	工件材料组 Workpiece Material Group	牌号说明和推荐应用 Grade description and recommended application

6630

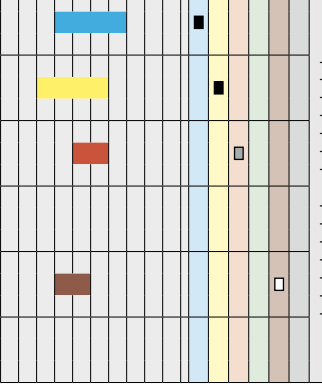

描述 / Description

- 6000 系列中最通用的牌号
- 功能梯度基材
- MTCVD 涂层牌号，主涂层为 TiCN
- 精加工至粗加工
- 用于加工材料组 P、M、K，也可有条件用于材料组 S
- 中等切削速度，有条件使用较高切削速度
- 连续切削和断续切削

- the most universal grade among 6000 grades
- functional gradient substrate
- MTCVD coated grade with main layer of TiCN
- finishing up to roughing
- machining of materials groups P,M,K, conditionally also for group S
- medium and conditionally higher cutting speed
- continuous and interrupted cut

6635

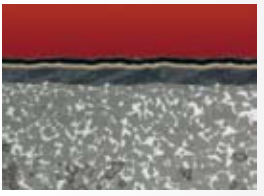

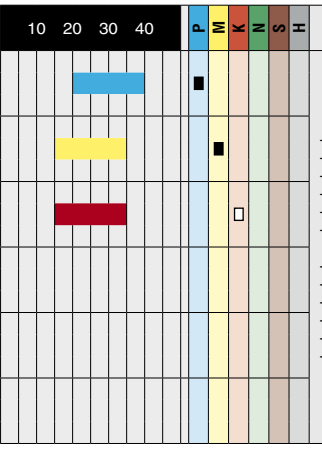

描述 / Description

- 功能梯度基材，高钴含量
- 薄 MTCVD 涂层
- 中至较大切屑横截面
- 适合加工材料组 P 和 M，有条件用于材料组 K
- 适合低到中等切削速度。
- 不利的切削工况和断续切削

- functional gradient substrate with high content of cobalt
- thin MTCVD coating
- medium and mainly higher chip cross-section
- machining of materials group P and M, conditionally for K
- low up to medium cutting speeds
- unfavourable cutting conditions and interrupted cu

6640

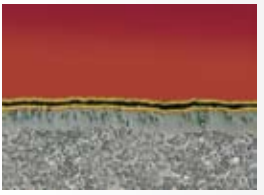

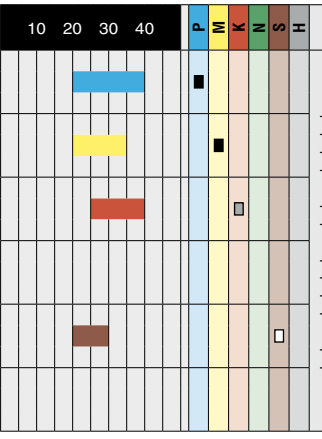

描述 / Description

- 亚微米基材，不含立方碳化硅
- 薄 MTCVD 涂层，主涂层为 TiCN
- 粗加工和半精加工
- 适用于加工材料组 P 和 M，也可用于材料组 K，有条件用于材料组 S
- 适合低到中等切削速度
- 不利的切削工况和断续切削

- submicron substrate without cubical carbides
- thin MTCVD coating with main layer of TiCN
- semi-roughing and roughing
- machining of materials group P and M, applicable also for group K and conditionally for S
- lower up to medium cutting speeds
- unfavourable cutting conditions and interrupted cut

■ - 主要应用 / main application　　▨ - 其他应用 / other applications　　□ - 有条件应用 / conditional applications

PRAMET

名称和显微结构 Designation and microstructure	应用范围 Application areas	工件材料组 Workpiece Material Group	牌号说明和推荐应用 Grade description and recommended application

9210

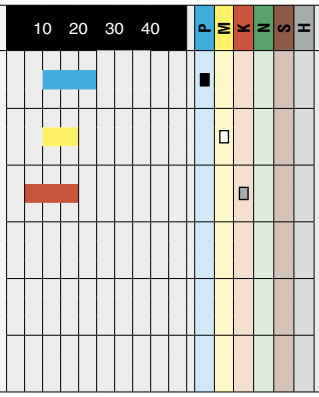

描述 / Description

- 92XX 牌号中最耐磨的牌号
- 功能梯度基材，低钴含量
- 厚 MTCVD 涂层，主涂层为氧化铝 (Al_2O_3)
- 在加涂层后经过特殊调整
- 精加工至粗加工
- 适合加工材料组 P 和 K，有条件用于材料组 M
- 较高的切削速度
- 用于连续切削工况，同时有条件用于中等断续切削工况

- the most wear resistant grade among 92XX grades
- functional gradient substrate with low content of cobalt
- thick MTCVD coating with the main layer of Al2O3
- special adjustment after coating
- finishing up to roughing
- machining of materials group P and K, conditionally for M
- higher cutting speeds
- continuous and conditionally also moderate interrupted cut

9230

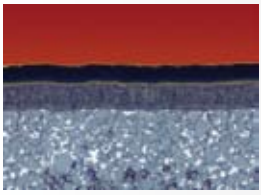

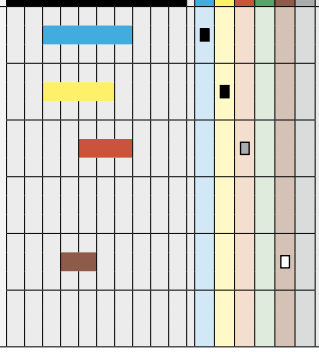

描述 / Description

- 9000 新一代牌号中最通用的牌号
- 功能梯度基材
- 现代中等厚度特殊 MT-CVD 涂层
- 在加涂层后经过特殊调整
- 适用于精加工至粗加工
- 用于加工材料组 P、M、K，有条件用于材料组 S
- 中等至更高切削速度
- 连续切削和断续切削

the most versatile grade among grades of new generation 9000
- functional gradient substrate
- modern medium-thick special MT-CVD coating
- special adjustment after coating
- for finishing up to roughing
- machining of materials groups P, M, K and conditionally for group S
- medium and higher cutting speeds
- continuous and interrupted cut

9235

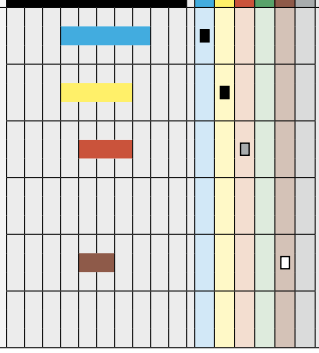

描述 / Description

- 功能梯度基材，具有相对高的钴含量
- 现代中等厚度特殊 MT-CVD 涂层
- 在加涂层后经过特殊调整
- 适用于粗加工至精加工
- 用于加工材料组 P、M、K，有条件用于材料组 S
- 中等切削速度
- 不利的切削工况，连续切削和断续切削

- functional gradient substrate with relatively high content of cobalt
- modern medium-thick special MT-CVD coating
- special adjustment after coating
- for roughing up to finishing
- machining of materials groups P, M, K and conditionally for group S
- medium cutting speeds
- unfavorable cutting conditions, continuous and interrupted cut

对于 MTCVD 涂层牌号，最小进给量为 0.1 mm/转；对于功能梯度基材牌号，则为 0.15 mm/转。

The minimum feed is 0,1 mm.rev^{-1} for MTCVD coated grades and 0,15 mm.rev^{-1} for grades with functional gradient substrate.

■ - 主要应用 / main application　　▨ - 其他应用 / other applications　　□ - 有条件应用 / conditional applications

表 7
Table No. 7

带涂层车削牌号 – 6000 系列
COATED TURNING GRADES – LINE 6000

名称和显微结构 Designation and microstructure	应用范围 Application areas	工件材料组 Workpiece Material Group	牌号说明和推荐应用 Grade description and recommended application

8016

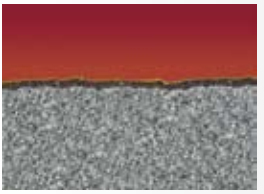

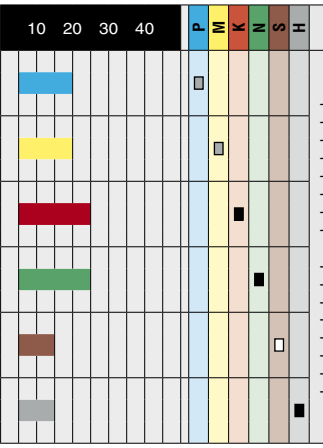

描述 / Description

- 8000 系列中最耐磨的牌号
- 亚微米基材，不含立方碳化硅，低钴含量
- 由 PVD 方法涂覆的纳米结构涂层
- 适用于具有高热应力的切削工况
- 通用牌号
- 小到中切屑横截面
- 高切削速度
- 稳定的切削工况

- the most wear resistant grade among 8000 grades
- submicron substrate without cubical carbides, low content of cobalt
- nanostructural coating applied by PVD method
- suitable for cutting conditions with high thermal stress
- general-purpose grade
- small up to medium chip cross section
- high cutting speed
- steady cutting conditions

8030

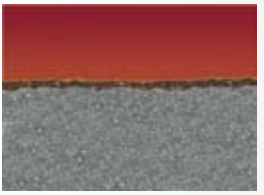

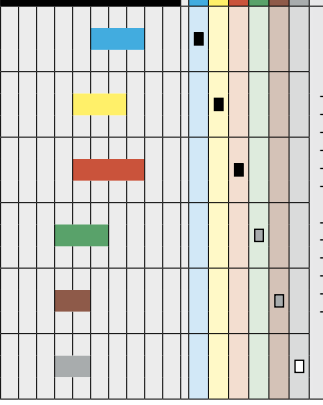

描述 / Description

- H 型亚微米基材
- 由 PVD 方法涂覆的纳米结构涂层
- 将优秀的耐磨性与良好的工作可靠性结合在一起
- 通用牌号
- 中等切削速度
- 用于不利切削工况

- submicron substrate type H
- nanostructural coating applied by PVD method
- combines good wear resistance and good operational reliability
- general-purpose grade
- medium cutting speed
- for less favourable cutting conditions

8040

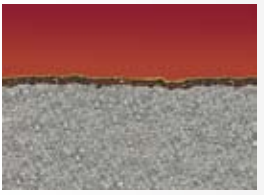

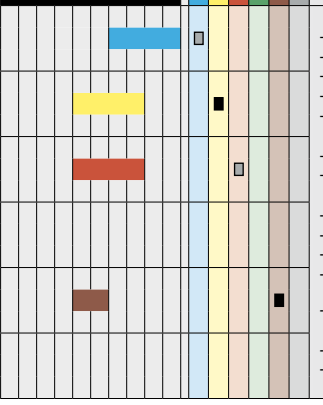

描述 / Description

- 8000 系列中韧性最高的牌号
- 不含立方碳化硅的基材，高钴含量。
- 由 PVD 方法涂覆的纳米结构涂层
- 适用于切削刃承受高机械应力的切削工况
- 适用于加工材料组 P、M、S，
  也可用于材料组 K
- 适合低到中等切削速度
- 不稳定的切削工况

- the toughest grade among 8000 grades
- substrate without cubical carbides with high content of cobalt
- nanostructural coating applied by PVD method
- suitable for cutting conditions with high mechanical stress of cutting edge
- suitable for machining of materials groups P,M,S, applicable also for K
- low up to medium cutting speed
- unstable cutting conditions

■ - 主要应用 / main application　　▣ - 其他应用 / other applications　　□ - 有条件应用 / conditional applications

PRAMET

名称和显微结构 Designation and microstructure	应用范围 Application areas	工件材料组 Workpiece Material Group	牌号说明和推荐应用 Grade description and recommended application

HF7

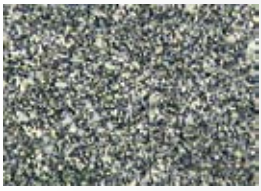

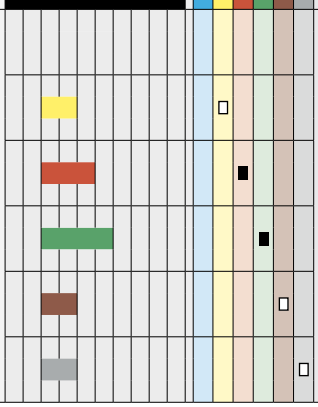

描述 / Description

- 亚微米牌号，不含立方碳化硅，低钴含量
- 常规用途牌号，适用于除 P 之外的所有工件材料组
- 小到中切屑横截面
- 稳定的切削工况

- submicron grade without cubical carbides with low content of cobalt
- general-purpose grade, suitable for all groups of work piece material except P
- small up to medium chip cross section
- steady cutting conditions

PB2

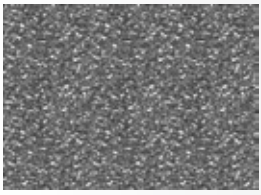

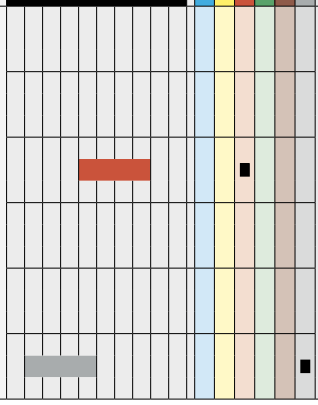

描述 / Description

- 用于精加工至粗加工工序，适合断续切削
- 使用时可以不用冷却液
- 在 PCBN 层中为高 CBN 含量
- 加工 K 和 H 材料组

- for finishing up to roughing operations, suitable for interrupted cut
- is possible to use it without cooling
- high content of CBN in layer of PCBN
- machining of materials groups K and H

PD1

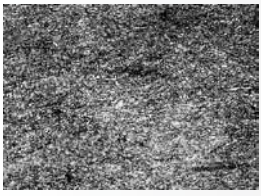

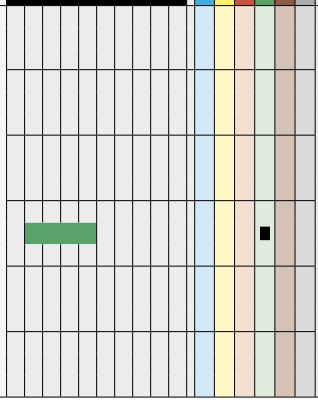

描述 / Description

- 用于粗加工工序
- 用于研磨材料的加工
- 平均金刚石颗粒度：10 μm
- 用于加工材料组 N
- 高切削速度
- 稳定的切削工况

- intended for roughing operations
- for machining of abrasive materials
- average diamond grain size: 10 µm
- machining of materials group N
- high cutting speeds
- steady cutting conditions

■ - 主要应用 / main application　　▨ - 其他应用 / other applications　　□ - 有条件应用 / conditional applications

初始切削工况选择
CHOICE OF INITIAL CUTTING CONDITIONS

PRAMET

刀具和初始切削工况的选择

1. 第一步要根据 ISO 513 标准确定待加工材料属于 6 个材料组中的哪一种 (参见表 1，第 230 页)。
2. 按照工艺上的工序要求、材料、工件形状和技术，选择刀片形状。之后根据切削深度，选择切削刃的长度(参见表 3，第 232 页)。
3. 根据加工材料和车削工序要求(精车、精加工、半精加工、粗加工、重型粗加工、切断和螺纹加工)，选择正确的牌号和断屑槽组合。在表中，对于每一加工材料组，介绍了三种可能的解决方案。您还可以利用表 5、6 (第 239 – 276 页) 和 7 (第 277-281 页) 核对自己的解决方案。
4. 按照第 234 页上的图 3，根据切深、进给量和切削工况选择刀片的刀尖圆角半径。如果要求确定的 R_a，则按照第 296 页上的表 14选择刀尖圆角半径 (最好选择修光刃刀片)。
5. 刀柄横截面的选择受限于刀片的形状，还受机床能够夹紧的最大可能的刀柄横截面的影响。对于内圆刀柄，根据加工的孔直径和刀具悬伸选择刀柄直径。最佳悬伸等于刀柄直径的三倍。
6. 在第 284 – 295 页上的表 8a-13b 中，根据刀片牌号和形状、进给量和切深选择初始切削速度。

   对于刀具寿命而言，有效初始切削工况为 15 分钟 (重型切削为 45 分钟)，不使用冷却液。

   螺纹加工、切断和开槽 – 使用冷却液。
7. 所述表格还包括重新计算切削速度的修正系数，如刀具状态、所要求的刀具寿命、牌号、工件硬度等。必要时，使用这些系数计算切削速度：

Choice of tool and initial cutting conditions

1. The first step is to classify the material to be machined into one of 6 groups according to standard ISO 513 *(see table no. 1 on page 230).*
2. In accordance with technological operation, material, shape of workpiece and technology choose the shape of cutting insert. Follows the choice of length of cutting edge with respect to depth of cut *(see table no. 3 on page 232).*
3. Choose the right combination of grade and chip breaker with respect to machined material and turning operation (fine, finishing, semi roughing, roughing, heavy roughing, cutting off and threading). Three possible solutions are mentioned in tables for each group of machined material. You can check your solution also in *tables no. 5, 6 (page 239 – 276)* and 7 *(page 277-281).*
4. According to *picture no. 3 on page 234* choose the corner radius of cutting insert with respect to depth of cut, feed and cutting conditions. If there is requirement for defined R_a choose the corner radius according *to table no.14 on page 296* (better choice is the WIPER insert).
5. Choice of cross-section of tool holder is limited by the shape of cutting insert and then by possibilities of the machine resp. by the clamping of maximum possible cross section of tool holder. For internal tool holder choose the diameter of holder with respect to diameter of machined hole and tool overhang. The optimum overhang equals to triple of diameter of tool holder.
6. *In tables no. 8a-13b on page 284 – 295* choose the initial cutting speed with the respect to grade and shape of cutting insert, feed and depth of cut.

   Initial cutting condition are valid for tool life 15 min. (45 min. for heavy roughing), without cooling.

   Threading, cutting off and recessing – with cooling.
7. Mentioned tables contains also correction factors for recalculation of cutting speed and tool condition, requested tool life, grade, hardness of work piece. If necessary use these factors for calculation of cutting speed:

$$v_c = v_{15} \cdot k_{vx} \cdot k_{vT} \cdot k_{vHB} \cdot (k_{vN})$$

注意：用这种方式计算的切削速度应是确定给定工序切削速度基本水平的初始值。

工件材料可加工性的变化是需要调整切削速度的原因。

Note: cutting speed calculated in this manner shall be the initial value determining a basic level of the cutting speed for the given operation.

A variance of machinability of a work piece material is the reason for a necessity to adjust the cutting speed.

表 8a
Table No. 8a

初始切削工况选择
CHOICE OF INITIAL CUTTING CONDITIONS

加工材料，ISO 主要材料组 Machined material, the main ISO group	符合 ISO 标准的刀片类型 CUTTING INSERTS TYPE according to ISO			车削切削工况 / CUTTING CONDITIONS FOR TURNING																							
				精车 Fine turning				精加工 Finishing				半精加工 Semi-roughing				粗加工 Roughing				重型粗加工 Heavy roughing				切断，割槽 Parting, grooving				螺纹加工 Threading	
				f = 0,05 ÷ 0,1 [mm/转] f = 0,05 ÷ 0,1 [mm.rev⁻¹]				f = 0,1 ÷ 0,2 [mm/转] f = 0,1 ÷ 0,2 [mm.rev⁻¹]				f = 0,2 ÷ 0,4 [mm/转] f = 0,2 ÷ 0,4 [mm.rev⁻¹]				f = 0,4 ÷ 0,8 [mm/转] f = 0,4 ÷ 0,8 [mm.rev⁻¹]				f > 1,0 [mm/转] f > 1,0 [mm.rev⁻¹]				f = 0,05 ÷ 0,3 [mm/转] f = 0,05 ÷ 0,3 [mm.rev⁻¹]				-	
				经过预加工的表面 非断续切削 Pre-machined surface non-interrupted cut		铸件、锻件 断续切削 casting, forging interrupted cut		经过预加工的表面 非断续切削 Pre-machined surface non-interrupted cut		铸件、锻件 断续切削 casting, forging interrupted cut		经过预加工的表面 非断续切削 Pre-machined surface non-interrupted cut		铸件、锻件 断续切削 casting, forging interrupted cut		经过预加工的表面 非断续切削 Pre-machined surface non-interrupted cut		铸件、锻件 断续切削 casting, forging interrupted cut		经过预加工的表面 非断续切削 Pre-machined surface non-interrupted cut		铸件、锻件 断续切削 casting, forging interrupted cut		外围凹槽 和切断 peripheral recess and cut-off		前端凹槽和切断 Front recess and cut-off		-	
P	..A ..M ..G ..U ..N		CNMA CNMM CNMG DNMA DNMM DNMG DNMU SNMA SNMM SNMG SNMX TNMA TNMM TNMG VNMU RNMA RNMM RNMG WNMA WNMM WNMG	I	8016 FF	I	8030 F	I	9210 F	I	9230 FM, F	I	6615 M	I	9230 M(WM)	I	9210 R(WM)	I	9230 R(WM)	I	9230 OR	I	9235 OR	I		I		I	
				II	8016 F	II	8016 FF	II	8016 F, FF	II	8016 F	II	9210 FM, M (WM)	II	6615 M (R)	II	6615, 9230 R	II	6640 R(OR)	II	9235 OR (HR)	II	9230 OR(HR)	II		II		II	
				III		III	8016 F	III	9210 WF	III	9230 WF	III	9230 SI	III	9230 M (R)	III	9210 OR	III	8040 HR	III	9210 HR	III	8040 SR,XR	III		III		III	
	..X		KNUX LNUX	I		I		I		I		I	6620 73	I	9230 72	I	6640 73	I		I	9210	I	9230	I		I		I	
				II		II		II		II		II	9230 72	II	6640 74	II	6640 74(78)	II		II	9230	II	9235	II		II		II	
	..W ..T		CCMW CCMT SCMW SCMT DCMW DCMT TCMW TCMT VCMW VCMT WCMW WCMT RCMW RCMT RCMX	I	8016 UM	I	8016 UM	I	6615 UR, UM	I	9230 UM	I	9210 UR	I	9230 UR	I	9210 48	I	9230 48	I	9230 SR, OR	I	9235 SR, OR	I		I		I	
				II	9210 UM	II	8030 SI	II	9210 UR, UM	II	9230 UR	II	9210 (46)47(48)	II	9230 (46)47(48)	II		II		II		II		II		II		II	
				III		III	8030 UM	III		III	8030 SI	III	9230 UR	III	8030 UR	III		III		III		III		III		III		III	
	..R ..N		SPMR SPGR SPUN SPGN TPMR TPGR TPUN TPGN	I	6605 46	I	9230 46	I	6605 46	I	9230 46	I	6615 47	I	9230 47	I		I		I		I		I		I		I	
				II	6630 46	II	6640 46	II	6605 47	II	9230 47	II	9230 47	II	6640 47	II		II		II		II		II		II		II	
				III	8016	III		III	9230 46,47	III	6640 46,47	III	9230 61	III	6640 61	III		III		III		III		III		III		III	
	..X		LFMX, LFUX, LCMX TN16E	I	8030	I	8030	I	8030	I	8030	I	6640	I	6640	I		I		I		I		I	6640	I	8030	I	
				II	-	II	-	II	6640	II	6640	II	8030	II	8030	II		II		II		II		II	8030	II	6640	II	
			TN11... TN16... TN22	I		I		I		I		I		I		I		I		I		I		I		I		I	8030

PRAMET

| 车削工序 Turning operation | 选择优先级 Priority of choice | 进给量 Feed f [mm/转] [mm.rev⁻¹] | 切深 a_p [mm] Depth of cut a_p [mm] | 进给量和切深范围 Ran. of feeds and depth of cut | | |

表 9a
Table No. 9a

初始切削工况选择
CHOICE OF INITIAL CUTTING CONDITIONS

加工材料，ISO 主要材料组 Machined material, the main ISO group	符合 ISO 标准的刀片类型 CUTTING INSERTS TYPE according to ISO			车削切削工况 / CUTTING CONDITIONS FOR TURNING																							
				精车 Fine turning				精加工 Finishing				半精加工 Semi-roughing				粗加工 Roughing				重型粗加工 Heavy roughing				切断，割槽 Parting, grooving				螺纹加工 Threading	
				f = 0,05 ÷ 0,1 [mm/转] f = 0,05 ÷ 0,1 [mm.rev⁻¹]				f = 0,1 ÷ 0,2 [mm/转] f = 0,1 ÷ 0,2 [mm.rev⁻¹]				f = 0,2 ÷ 0,4 [mm/转] f = 0,2 ÷ 0,4 [mm.rev⁻¹]				f = 0,4 ÷ 0,8 [mm/转] f = 0,4 ÷ 0,8 [mm.rev⁻¹]				f > 1,0 [mm/转] f > 1,0 [mm.rev⁻¹]				f = 0,05 ÷ 0,3 [mm/转] f = 0,05 ÷ 0,3 [mm.rev⁻¹]				-	
				经过预加工的表面非断续切削 Pre-machined surface non-interrupted cut		铸件、锻件断续切削 casting, forging interrupted cut		经过预加工的表面非断续切削 Pre-machined surface non-interrupted cut		铸件、锻件断续切削 casting, forging interrupted cut		经过预加工的表面非断续切削 Pre-machined surface non-interrupted cut		铸件、锻件断续切削 casting, forging interrupted cut		经过预加工的表面非断续切削 Pre-machined surface non-interrupted cut		铸件、锻件断续切削 casting, forging interrupted cut		经过预加工的表面非断续切削 Pre-machined surface non-interrupted cut		铸件、锻件断续切削 casting, forging interrupted cut		外围凹槽和切断 peripheral recess and cut-off		前端凹槽和切断 Front recess and cut-off		-	
M	..A ..M ..G ..U ..N		CNMA CNMM CNMG DNMA DNMM DNMG DNMU SNMA SNMM SNMG SNMX TNMA TNMM TNMG VNMU RNMA RNMM RNMG WNMA WNMM WNMG	I	8016 FF	I	8030 F	I	8016 FF	I	8030 FM, F	I	9230 FM, SI	I	8030 FM, SI	I	9210 OR	I	9235 NR2	I	9230 NR2	I	9235 NR2	I		I		I	
				II	8016 F	II	8016 F	II	8016 F	II	9235 NM	II	9230 NR2 (OR)	II	9235 NM	II	9230 NR2	II	6640 0R (DR)	II	9235 OR (NR2)	II	9230 OR (NR2)	II		II		II	
				III		III	8016 FF	III	9230 SI	III	9230 F(SI)	III	9210 M (R)	III	9230 M (R)	III	9210 R	III	9230 HR	III	9210 OR	III	9230 HR	III		III		III	
	..X		KNUX LNUX	I		I		I		I		I	9230 72	I	9230 72	I	6640 73	I		I	9210	I	9230	I		I		I	
				II		II		II		II		II	6615 73	II	6640 74	II	6640 74(78)	II		II	9230	II	9235	II		II		II	
	..W ..T		CCMW CCMT SCMW SCMT DCMW DCMT TCMW TCMT VCMW VCMT WCMW WCMT RCMW RCMT RCMX	I	8016 UM	I	8016 UM	I	9210 UR	I	9230 UR	I	6615 UR	I	9230 UR	I	6615 48	I	9230 48	I		I		I		I		I	
				II	9230 SI	II	8030 SI	II	9230 UR	II	8030 UR	II	9210 (46)47(48)	II	9230 (46)47(48)	II	9235 SR, OR	II	9235 SR, OR	II		II		II		II		II	
				III	9230 UR	III	8030 UR	III		III	8030 SI	III	9230 UR	III	8030 UR	III		III		III		III		III		III		III	
	..R ..N		SPMR SPGR SPUN SPGN TPMR TPGR TPUN TPGN	I	8016	I	9230 46	I	9230 47	I	9230 46	I	9230 47	I	9230 47	I		I		I		I		I		I		I	
				II	9230 46	II	6640 46	II	9230 46,47	II	9230 47	II	9230 61	II	6640 47	II		II		II		II		II		II		II	
				III		III		III	8016	III	6640 46,47	III	8016	III	6640 61	III		III		III		III		III		III		III	
	..X		LFMX, LFUX, LCMX TN16E	I	8030	I	8030	I	8030	I	8030	I	6640	I	6640	I		I		I		I		I	6640	I	8030	I	
				II	-	II	-	II	6640	II	6640	II	8030	II	8030	II		II		II		II		II	8030	II	6640	II	
			TN11... TN16... TN22	I		I		I		I		I		I		I		I		I		I		I		I		I	8030

车削工序 Turning operation	选择优先级 Priority of choice	进给量 f [mm/转] Feed f [mm.rev^{-1}]	切深 a_p [mm] Depth of cut a_p [mm]	9210 S.. C.. W..	9210 T.. D.. K..	9210 V.. (L..)	9210 R..	9230 S.. C.. W..	9230 T.. D.. K..	9230 V.. (L..)	9230 R..	9235 S.. C.. W..	9235 T.. D.. K..	9235 V.. (L..)	9235 R..	6630 S.. C.. W..	6630 T.. D.. K..	6630 V.. (L..)	6630 R..	6635 S.. C.. W..	6635 T.. D.. K..	6635 V.. (L..)	6635 R..	6640 S.. C.. W..	6640 T.. D.. K..	6640 V.. (L..)	6640 R..	8016 S.. C.. W..	8016 T.. D.. K..	8016 V.. (L..)	8016 R..	8030 S.. C.. W..	8030 T.. D.. K..	8030 V.. (L..)	8030 R..	8040 S.. C.. W..	8040 T.. D.. K..	8040 V.. (L..)	8040 R..	寿命因子 / Life factor
精车 Fine turning	I	0,05		-	-	-	-	-	-	-	-	-	-	-	-	-	-	-	-	-	-	-	-	280	265	265	-	135	125	120	150	125	120	110	140	-	-	-	-	V_{15} [m.min^{-1}]
	II	0,08	0,5	-	-	-	-	-	-	-	-	-	-	-	-	-	-	-	-	-	-	-	-	230	215	215	-	120	118	105	130	120	115	105	130	-	-	-	-	
	III	0,10		-	-	-	-	-	-	-	-	-	-	-	-	-	-	-	-	-	-	-	-	210	197	197	-	115	108	100	125	110	105	95	120	-	-	-	-	
精加工 Finishing	I	0,10		-	-	-	-	-	-	-	-	-	-	-	-	-	-	-	-	-	-	-	-	205	195	180	225	135	125	120	150	115	110	100	125	110	105	95	120	
	II	0,15	1,5	200	190	180	225	195	185	170	215	165	155	145	180	180	170	160	200	175	170	155	-	175	165	155	190	130	125	115	145	108	100	95	120	95	90	85	105	
	III	0,20		195	185	170	215	175	165	155	195	155	145	135	170	175	165	155	190	160	150	135	-	155	145	135	170	125	115	110	140	105	95	90	115	85	80	75	95	
半精加工 Semi-roughing	I	0,20		185	175	165	205	165	160	145	185	145	140	130	160	165	155	145	180	155	130	130	-	150	140	130	165	-	-	-	-	100	95	88	110	80	75	70	90	
	II	0,30	2,5	150	140	130	165	145	140	125	160	135	130	120	150	140	130	125	155	120	110	120	-	110	105	95	120	-	-	-	-	80	75	70	90	70	65	60	75	
	III	0,40		130	125	120	145	130	125	115	145	130	120	115	140	125	120	110	140	105	95	90	-	85	80	75	95	-	-	-	-	70	65	60	75	65	60	55	70	
粗加工 Roughing	I	0,40		125	120	110	135	120	115	105	135	120	115	105	130	120	110	100	130	95	90	80	-	80	75	70	90	-	-	-	-	65	60	55	70	60	55	50	65	
	II	0,60	5,0	105	100	-	110	105	100	-	115	110	105	-	120	100	95	-	110	80	70	-	-	60	55	50	65	-	-	-	-	55	50	-	60	50	45	-	55	
	III	0,80		95	85	-	100	95	90	-	105	105	100	-	115	90	80	-	95	75	65	-	-	50	45	40	55	-	-	-	-	50	45	-	55	45	40	-	50	
重型粗加工 Heavy roughing	I	0,80		-	-	-	-	65	65	-	-	75	70	-	-	65	65	-	-	60	60	-	-	25	20	-	-	-	-	-	-	35	35	-	-	35	30	-	-	V_{45} [m.min^{-1}]
	II	1,00	12,0	-	-	-	-	60	60	-	-	75	70	-	-	60	60	-	-	55	50	-	-	20	15	-	-	-	-	-	-	25	25	-	-	30	28	-	-	
	III	1,30		-	-	-	-	55	55	-	-	70	65	-	-	55	50	-	-	50	45	-	-	15	10	-	-	-	-	-	-	20	20	-	-	25	25	-	-	
切断、割槽 Parting, grooving		0,10	-	-	-	-	-	-	-	-	-	-	-	-	-	-	-	-	-	-	-	-	-	-	-	110	-	-	-	-	-	-	-	105	-	-	-	-	-	V_{15} [m.min^{-1}]
		0,15	-	-	-	-	-	-	-	-	-	-	-	-	-	-	-	110	-	-	-	-	-	-	-	102	-	-	-	-	-	-	-	95	-	-	-	-	-	
		0,20	-	-	-	-	-	-	-	-	-	-	-	-	-	-	-	100	-	-	-	-	-	-	-	96	-	-	-	-	-	-	-	91	-	-	-	-	-	
		0,30	-	-	-	-	-	-	-	-	-	-	-	-	-	-	-	90	-	-	-	-	-	-	-	87	-	-	-	-	-	-	-	82	-	-	-	-	-	
端面和内部凹槽 Front and internal recesses		0,10	-	-	-	-	-	-	-	-	-	-	-	-	-	-	-	-	-	-	-	-	-	-	-	75	-	-	-	-	-	-	-	75	-	-	-	-	-	
		0,15	-	-	-	-	-	-	-	-	-	-	-	-	-	-	-	80	-	-	-	-	-	-	-	70	-	-	-	-	-	-	-	67	-	-	-	-	-	
		0,20	-	-	-	-	-	-	-	-	-	-	-	-	-	-	-	70	-	-	-	-	-	-	-	68	-	-	-	-	-	-	-	64	-	-	-	-	-	
		0,30	-	-	-	-	-	-	-	-	-	-	-	-	-	-	-	60	-	-	-	-	-	-	-	60	-	-	-	-	-	-	-	55	-	-	-	-	-	
螺纹加工 Threading				-	-	-	-	-	-	-	-	-	-	-	-	-	-	-	-	-	-	-	-	-	-	-	-	-	-	-	-	-	-	130	-	-	-	-	-	
				-	-	-	-	-	-	-	-	-	-	-	-	-	-	-	-	-	-	-	-	-	-	-	-	-	-	-	-	-	-	120	-	-	-	-	-	
				-	-	-	-	-	-	-	-	-	-	-	-	-	-	-	-	-	-	-	-	-	-	-	-	-	-	-	-	-	-	110	-	-	-	-	-	

M

HB = 180 - 210

8b	5-11b

速度因子 k_{vx}
Speed factor k_{vx}

锻造和铸造氧化皮 Skin of forging and casting	0,70-0,80
I内圆车削 nternal turning	0,75-0,85
I断续切削 nterrupted cut	0,80-0,90
良好的机床状况 Good machine conditions	1,05-1,20
恶劣的机床状况 Bad machine conditions	0,85-0,95

刀具寿命因子 k_{vT}
Tool life factor k_{vT}

T_{min}	k_{vT}	T_{min}	k_{vT}
10	1,10	30	0,84
15	1,00	45	0,76
20	0,93	60	0,71

重型粗加工刀具寿命因子
Tool life factor for heavy roughing

T_{min}	k_{vT}	T_{min}	k_{vT}
30	1,10	60	0,93
45	1,00		

工件硬度因子
Work piece hardness factor

HB	k_{vHB}	HB	k_{vHB}
<150	1,40		0,72
150-180	1,18		0,68
180-210	1,00		0,66
210-240	0,87		0,62
240-270	0,79		

表 10a
Table No. 10a

初始切削工况选择
CHOICE OF INITIAL CUTTING CONDITIONS

加工材料，ISO 主要材料组 Machined material, the main ISO group	符合 ISO 标准的刀片类型 CUTTING INSERTS TYPE according to ISO			车削切削工况 / CUTTING CONDITIONS FOR TURNING																							
				精车 Fine turning				精加工 Finishing				半精加工 Semi-roughing				粗加工 Roughing				重型粗加工 Heavy roughing				切断，割槽 Parting, grooving				螺纹加工 Threading	
				f = 0,05 ÷ 0,1[mm/转] f = 0,05 ÷ 0,1[mm.rev⁻¹]				f = 0,1 ÷ 0,2 [mm/转] f = 0,1 ÷ 0,2 [mm.rev⁻¹]				f = 0,2 ÷ 0,4 [mm/转] f = 0,2 ÷ 0,4 [mm.rev⁻¹]				f = 0,4 ÷ 0,8 [mm/转] f = 0,4 ÷ 0,8 [mm.rev⁻¹]				f > 1,0 [mm/转] f > 1,0 [mm.rev⁻¹]				f = 0,05 ÷ 0,3 [mm/转] f = 0,05 ÷ 0,3 [mm.rev⁻¹]				-	
				经过预加工的表面非断续切削 Pre-machined surface non-interrupted cut		铸件、锻件断续切削 casting, forging interrupted cut		经过预加工的表面非断续切削 Pre-machined surface non-interrupted cut		铸件、锻件断续切削 casting, forging interrupted cut		经过预加工的表面非断续切削 Pre-machined surface non-interrupted cut		铸件、锻件断续切削 casting, forging interrupted cut		经过预加工的表面非断续切削 Pre-machined surface non-interrupted cut		铸件、锻件断续切削 casting, forging interrupted cut		经过预加工的表面非断续切削 Pre-machined surface non-interrupted cut		铸件、锻件断续切削 casting, forging interrupted cut		外围凹槽和切断 peripheral recess and cut-off		前端凹槽和切断 Front recess and cut-off		-	
K	..A ..M ..G ..U ..N		CNMA CNMM CNMG DNMA DNMM DNMG DNMU SNMA SNMM SNMG SNMX TNMA TNMM TNMG VNMU RNMA RNMM RNMG WNMA WNMM WNMG	I	8016 F	I	8030 F	I	6605	I	9230 F	I	6605	I	9230 M (WM)	I	6605 R	I	9230 R(WM)	I	6615 OR	I	9230 HR	I		I		I	
				II		II	8016 F	II	8016 F	II	8016 F	II	6605 R	II	6615 R	II	6615 R (WM)	II	6640 R	II	9230 HR	II	6640 OR (HR)	II		II		II	
				III		III		III	6615 WF	III	9230 WF	III	6615 M (WM)	III	9230 M (R)	III	6605	III	8040 HR	III	9230 OR	III	8040 SR, XR	III		III		III	
	..X		KNUX LNUX	I		I		I		I		I	6620 73	I	9230 72	I	6640 73	I		I	6615	I	9230	I		I		I	
				II		II		II		II		II	9230 72	II	6640 74	II	6640 74 (78)	II		II	9230	II	9235	II		II		II	
	..W ..T		CCMW CCMT SCMW SCMT DCMW DCMT TCMW TCMT VCMW VCMT WCMW WCMT RCMW RCMT RCMX	I	8016 UM	I	8016 UM	I	6605	I	9230 UM	I	6605	I	9230 UR	I	6615 48	I	9230 48	I		I		I		I		I	
				II	6605	II	8030 UM	II	9210 UR	II	9230 UR	II	9210 UR	II	9230 (46)47(48)	II	9230 SR, OR	II	9235 SR, OR	II		II		II		II		II	
				III		III		III	9210 UM	III	8030 UR (UM)	III	9210 (46)47(48)	III	8030 UR	III		III		III		III		III		III		III	
	..R ..N		SPMR SPGR SPUN SPGN TPMR TPGR TPUN TPGN	I	8016	I	9230 46	I	6605 46, 47	I	9230 46	I	6615 47	I	9230 47	I		I		I		I		I		I		I	
				II	6605 46	II	6640 46	II	6615 46, 47	II	9230 47	II	9230 47	II	6640 47	II		II		II		II		II		II		II	
				III	9230 46	III	8016	III	9230 46,47	III	6640 46,47	III	9230 61	III	6640 61	III		III		III		III		III		III		III	
	..X		LFMX, LFUX, LCMX TN16E	I	8030	I	8030	I	8030	I	8030	I	6640	I	6640	I		I		I		I		I	6640	I	8030	I	
				II	-	II	-	II	6640	II	6640	II	8030	II	8030	II		II		II		II		II	8030	II	6640	II	
			TN11... TN16... TN22	I		I		I		I		I		I		I		I		I		I		I		I		I	8030

车削工序 Turning operation	选择优先级 Priority of choice	进给量 f [mm/转] Feed f [mm.rev⁻¹]	切深 a_p [mm] Depth of cut a_p [mm]	6605 S.. C.. W..	6605 T.. D.. K..	6605 V.. (L..)	6605 R..	6615 S.. C.. W..	6615 T.. D.. K..	6615 V.. (L..)	6615 R..	6620 S.. C.. W..	6620 T.. D.. K..	6620 V.. (L..)	6620 R..	9210 S.. C.. W..	9210 T.. D.. K..	9210 V.. (L..)	9210 R..	9230 S.. C.. W..	9230 T.. D.. K..	9230 V.. (L..)	9230 R..	9235 S.. C.. W..	9235 T.. D.. K..	9235 V.. (L..)	9235 R..	6630 S.. C.. W..	6630 T.. D.. K..	6630 V.. (L..)	6630 R..	6635 S.. C.. W..	6635 T.. D.. K..	6635 V.. (L..)	6635 R..	6640 S.. C.. W..	6640 T.. D.. K..	6640 V.. (L..)	6640 R..	8016 S.. C.. W..	8016 T.. D.. K..	8016 V.. (L..)	8016 R..	8030 S.. C.. W..	8030 T.. D.. K..	8030 V.. (L..)	8030 R..	8040 S.. C.. W..	8040 T.. D.. K..	8040 V.. (L..)	8040 R..	寿命因子 / Life factor
精车 Fine turning	I	0,05		-	-	-	-	-	-	-	-	-	-	-	-	-	-	-	-	-	-	-	-	-	-	-	-	-	-	-	-	-	-	-	-	-	-	260	245	230	285	145	135	130	160	-	-	-	-	V_{15} [m.min⁻¹]
	II	0,08	0,5	-	-	-	-	-	-	-	-	-	-	-	-	-	-	-	-	-	-	-	-	-	-	-	-	-	-	-	-	-	-	-	-	-	-	240	225	210	265	140	130	125	155	-	-	-	-	
	III	0,10		-	-	-	-	-	-	-	-	-	-	-	-	-	-	-	-	-	-	-	-	-	-	-	-	-	-	-	-	-	-	-	-	-	-	230	215	200	255	135	125	120	150	-	-	-	-	
精加工 Finishing	I	0,10		415	395	365	455	-	-	-	-	340	320	300	375	-	-	-	-	-	-	-	-	-	-	-	-	-	-	-	-	-	-	200	190	175	220	-	-	-	-	-	-	-	-	-	-	-	-	
	II	0,15	1,5	360	345	320	400	320	305	280	350	310	290	275	340	310	290	270	340	310	295	270	340	260	245	230	285	265	250	235	290	225	215	205	-	185	175	165	205	-	-	-	-	-	-	-	-	-	-	
	III	0,20		330	310	290	360	300	285	265	330	290	275	255	320	290	275	255	320	280	265	245	310	245	235	215	270	260	245	230	286	215	205	195	-	175	165	155	195	-	-	-	-	-	-	-	-	-	-	
半精加工 Semi-roughing	I	0,20		310	295	275	345	285	270	250	315	275	260	240	300	275	260	240	300	265	250	235	290	235	220	205	255	250	235	220	275	205	190	180	-	170	160	150	185	-	-	-	-	-	-	-	-	150	140	-	-	
	II	0,30	2,5	275	260	240	300	260	250	230	290	250	235	220	275	250	220	200	250	230	220	205	255	215	205	190	240	205	195	180	225	180	165	175	-	135	125	120	150	-	-	-	-	-	-	-	-	120	110	-	-	
	III	0,40		250	235	220	275	245	235	215	270	230	215	200	255	220	190	180	220	210	200	185	230	205	195	180	225	185	175	165	205	155	140	130	-	115	110	100	125	-	-	-	-	-	-	-	-	100	95	-	-	
粗加工 Roughing	I	0,40		230	220	205	255	230	220	200	255	215	200	190	235	190	180	170	205	195	185	170	215	190	180	165	210	170	160	150	185	140	130	126	-	105	100	90	115	-	-	-	-	-	-	-	-	95	90	-	-	
	II	0,60	5,0	200	190	175	220	210	200	185	235	195	185	-	215	170	160	-	180	170	160	-	185	175	165	-	195	145	135	-	160	120	110	-	-	85	80	-	95	-	-	-	-	-	-	-	-	75	70	-	-	
	III	0,80		185	175	160	200	200	190	175	220	185	175	-	205	160	140	-	170	155	145	-	170	165	160	-	185	125	120	-	140	110	100	-	-	75	70	-	80	-	-	-	-	-	-	-	-	65	60	-	-	
重型粗加工 Heavy roughing	I	0,80		-	-	-	-	-	-	-	-	-	-	-	-	125	120	110	140	110	105	-	-	120	115	-	-	85	80	-	-	-	-	-	-	45	40	-	-	-	-	-	-	-	-	-	-	40	35	-	-	V_{45} [m.min⁻¹]
	II	1,00	12,0	-	-	-	-	-	-	-	-	-	-	-	-	120	115	105	135	100	95	-	-	115	110	-	-	75	70	-	-	-	-	-	-	40	35	-	-	-	-	-	-	-	-	-	-	35	30	-	-	
	III	1,30		-	-	-	-	-	-	-	-	-	-	-	-	115	105	100	125	90	85	-	-	110	105	-	-	70	65	-	-	-	-	-	-	35	30	-	-	-	-	-	-	-	-	-	-	30	25	-	-	
切断、槽 Parting, grooving		0,10	-	-	-	-	-	-	-	-	-	-	-	-	-	-	-	-	-	-	-	-	-	-	-	-	-	-	-	-	-	-	-	-	-	-	-	150	-	-	-	-	-	-	100	-	-	-	-	V_{15} [m.min⁻¹]
		0,15	-	-	-	-	-	-	-	-	-	-	-	-	-	-	-	-	-	-	-	-	-	-	-	-	-	-	-	160	-	-	-	-	-	-	-	130	-	-	-	-	-	-	90	-	-	-	-	
		0,20	-	-	-	-	-	-	-	-	-	-	-	-	-	-	-	-	-	-	-	-	-	-	-	-	-	-	-	145	-	-	-	-	-	-	-	115	-	-	-	-	-	-	80	-	-	-	-	
		0,30	-	-	-	-	-	-	-	-	-	-	-	-	-	-	-	-	-	-	-	-	-	-	-	-	-	-	-	130	-	-	-	-	-	-	-	100	-	-	-	-	-	-	70	-	-	-	-	
端面和内部凹槽 Front and internal recesses		0,10	-	-	-	-	-	-	-	-	-	-	-	-	-	-	-	-	-	-	-	-	-	-	-	-	-	-	-	-	-	-	-	-	-	-	-	100	-	-	-	-	-	-	70	-	-	-	-	
		0,15	-	-	-	-	-	-	-	-	-	-	-	-	-	-	-	-	-	-	-	-	-	-	-	-	-	-	-	120	-	-	-	-	-	-	-	90	-	-	-	-	-	-	65	-	-	-	-	
		0,20	-	-	-	-	-	-	-	-	-	-	-	-	-	-	-	-	-	-	-	-	-	-	-	-	-	-	-	100	-	-	-	-	-	-	-	80	-	-	-	-	-	-	60	-	-	-	-	
		0,30	-	-	-	-	-	-	-	-	-	-	-	-	-	-	-	-	-	-	-	-	-	-	-	-	-	-	-	90	-	-	-	-	-	-	-	75	-	-	-	-	-	-	50	-	-	-	-	
螺纹加工 Threading				-	-	-	-	-	-	-	-	-	-	-	-	-	-	-	-	-	-	-	-	-	-	-	-	-	-	-	-	-	-	-	-	-	-	-	-	-	-	-	-	150	-	-	-	-	-	
				-	-	-	-	-	-	-	-	-	-	-	-	-	-	-	-	-	-	-	-	-	-	-	-	-	-	-	-	-	-	-	-	-	-	-	-	-	-	-	-	130	-	-	-	-	-	
				-	-	-	-	-	-	-	-	-	-	-	-	-	-	-	-	-	-	-	-	-	-	-	-	-	-	-	-	-	-	-	-	-	-	-	-	-	-	-	-	120	-	-	-	-	-	

进给量和切深范围 Ran. of feeds and depth of cut

K

铸铁类型 / Type of cast iron

灰铸铁、可锻铸铁、球墨铸铁、耐热铸铁、特殊铸铁
Grey, malleable, nodular, heat resistant, special

速度因子 k_{vx}
Speed factor k_{vx}

锻造和铸造氧化皮 Skin of forging and casting	0,70-0,80
I内圆车削 nternal turning	0,75-0,85
II断续切削 nterrupted cut	0,80-0,90
良好的机床状况 Good machine conditions	1,05-1,20
不好的机床状况 Bad machine conditions	0,85-0,95

刀具寿命因子 k_{vT}
Tool life factor k_{vT}

T_{min}	k_{vT}	T_{min}	k_{vT}
10	1,10	30	0,84
15	1,00	45	0,76
20	0,93	60	0,71

重型粗加工刀具寿命因子
Tool life factor for heavy roughing

T_{min}	k_{vT}	T_{min}	k_{vT}
30	1,10	60	0,93
45	1,00		

工件材料因子
Work piece material factor

铸铁类型 / Type of cast iron	k_{vM}
灰口铸铁 / Grey	1,00
可锻铸铁 / Malleable	0,85
球墨铸铁 / Nodular	0,95
耐热铸铁 / Heat resistant	0,40

工件硬度因子
Work piece hardness factor

HB	铸铁类型 / Type of cast iron		
	灰口铸铁	可锻铸铁	耐热铸铁
150-180	1,4	1,15	-
180-200	1,25	1,08	-
200-220	1,1	1,03	-
220-240	1	1	-
240-280	0,86	0,96	-
280-330	0,6	0,85	-
260-300	-	-	1,25
300-360	-	-	1
360-425	-	-	0,75

表 11a
Table No. 11a

初始切削工况选择
CHOICE OF INITIAL CUTTING CONDITIONS

Machined material, the main ISO group	CUTTING INSERTS TYPE according to ISO			CUTTING CONDITIONS FOR TURNING																							
				Fine turning				Finishing				Semi-roughing				Roughing				Heavy roughing				Parting, grooving				Threading	
				f = 0,05 ÷ 0,1 f = 0,05 ÷ 0,1 [mm.rev⁻¹]				f = 0,1 ÷ 0,2 f = 0,1 ÷ 0,2 [mm.rev⁻¹]				f = 0,2 ÷ 0,4 f = 0,2 ÷ 0,4 [mm.rev⁻¹]				f = 0,4 ÷ 0,8 f = 0,4 ÷ 0,8 [mm.rev⁻¹]				f > 1,0 f > 1,0 [mm.rev⁻¹]				f = 0,05 ÷ 0,3 f = 0,05 ÷ 0,3 [mm.rev⁻¹]				-	
				Pre-machined surface non-interrupted cut		casting, forging interrupted cut		Pre-machined surface non-interrupted cut		casting, forging interrupted cut		Pre-machined surface non-interrupted cut		casting, forging interrupted cut		Pre-machined surface non-interrupted cut		casting, forging interrupted cut		Pre-machined surface non-interrupted cut		casting, forging interrupted cut		peripheral recess and cut-off		Front recess and cut-off		-	
N	..A ..M ..G ..U ..N		CNMA CNMM CNMG DNMA DNMM DNMG DNMU SNMA SNMM SNMG SNMX TNMA TNMM TNMG VNMU RNMA RNMM RNMG WNMA WNMM WNMG	I		I		I		I		I		I		I		I		I		I		I		I		I	
				II		II		II		II		II		II		II		II		II		II		II		II	
				III	8016 F	III	8030 F (SI)	III	8016 F	III	8030 F (SI)	III	8016 F	III	8030 F (SI, NR)	III		III		III		III		III		III		III	
	..X		KNUX	I		I		I		I		I		I		I		I		I		I		I		I		I	
				II		II		II		II		II		II		II		II		II		II		II		II	
	..W ..T		CCMW CCG(M)T SCMW SCG(M)T DCMW DCG(M)T TCMW TCG(M)T VCMW VCG(M)T WCMW WCG(M)T RCMW RCG(M)T RCMX	I	HF7, 8016 Al	I	HF7, 8016 Al	I	HF7, 8016 Al	I	HF7, 8016 Al	I	HF7, 8016 Al	I	HF7, 8016 Al	I		I		I		I		I		I		I	
				II	PD1	II	PD1	II	PD1	II	PD1	II	PD1	II	PD1	II		II		II		II		II		II		II	
				III		III	8030 SI (UR)	III		III	8030 SI (UR)	III		III	8030 SI (UR)	III		III		III		III		III		III		III	
	..R ..N		SPMR SPGR SPUN SPGN TPMR TPGR TPUN TPGN	I		I		I		I		I		I		I		I		I		I		I		I		I	
				II		II		II		II		II		II		II		II		II		II		II		II	
				III		III		III		III		III		III		III		III		III		III		III		III	
	..X		LFMX, LFUX, LCMX TN16E	I		I		I		I		I		I		I		I		I		I		I	8030	I	8030	I	
				II		II		II		II		II		II		II		II		II		II		II	6640	II	6640	II	
			TN11... TN16... TN22	I		I		I		I		I		I		I		I		I		I		I		I		I	8030

PRAMET

车削工序 Turning operation	选择优先级 Priority of choice	进给量和切深范围 Ran. of feeds and depth of cut: 进给量 f [mm/转] Feed f [mm.rev⁻¹]	切深 a_p [mm] Depth of cut a_p [mm]	Wrought Al alloys, heat-treated HB=100												Al with Si >12%																														寿命因子 / Life factor
				8016				8030				HF7				PKD																														
				S.. C.. W..	T.. D.. K..	V.. (L.)	R..	S.. C.. W..	T.. D.. K..	V.. (L.)	R..	S.. C.. W..	T.. D.. K..	V.. (L.)	R..	S.. C.. W..	T.. D.. K..	V.. (L.)	R..																										
精车 Fine turning	I	0,05		-	-	-	-	-	-	-	-	-	-	-	-	-	-	-	-																											V_{15} [m.min⁻¹]
	II	0,08	0,5	-	-	-	-	-	-	-	-	-	-	-	-	-	-	-	-																											
	III	0,10		-	-	-	-	-	-	-	-	-	-	-	-	-	-	-	-																											
精加工 Finishing	I	0,10		900	-	-	-	-	-	-	-	700	-	-	-	850	-	-	-																											
	II	0,15	1,5	800	-	-	-	-	-	-	-	650	-	-	-	600	-	-	-																											
	III	0,20		750	-	-	-	-	-	-	-	600	-	-	-	550	-	-	-																											
半精加工 Semi-roughing	I	0,20		750	-	-	-	-	-	-	-	550	-	-	-	700	-	-	-																											
	II	0,30	2,5	600	-	-	-	-	-	-	-	480	-	-	-	550	-	-	-																											
	III	0,40		550	-	-	-	-	-	-	-	400	-	-	-	500	-	-	-																											
粗加工 Roughing	I	0,40		450	-	-	-	-	-	-	-	400	-	-	-	500	-	-	-																											
	II	0,60	5,0	400	-	-	-	-	-	-	-	350	-	-	-	450	-	-	-																											
	III	0,80		300	-	-	-	-	-	-	-	300	-	-	-	400	-	-	-																											
重型粗加工 Heavy roughing	I	0,80		-	-	-	-	-	-	-	-	-	-	-	-	-	-	-	-																											V_{45} [m.min⁻¹]
	II	1,00	12,0	-	-	-	-	-	-	-	-	-	-	-	-	-	-	-	-																											
	III	1,30		-	-	-	-	-	-	-	-	-	-	-	-	-	-	-	-																											
切断，割槽 Parting, grooving		0,10	-	-	-	-	-	-	-	650	-	-	-	-	-	-	-	-	-																											V_{15} [m.min⁻¹]
		0,15	-	-	-	-	-	-	-	550	-	-	-	-	-	-	-	-	-																											
		0,20	-	-	-	-	-	-	-	450	-	-	-	-	-	-	-	-	-																											
		0,30	-	-	-	-	-	-	-	400	-	-	-	-	-	-	-	-	-																											
端面和内部凹槽 Front and internal recesses		0,10	-	-	-	-	-	-	-	500	-	-	-	-	-	-	-	-	-																											
		0,15	-	-	-	-	-	-	-	450	-	-	-	-	-	-	-	-	-																											
		0,20	-	-	-	-	-	-	-	360	-	-	-	-	-	-	-	-	-																											
		0,30	-	-	-	-	-	-	-	320	-	-	-	-	-	-	-	-	-																											
螺纹加工 Threading				-	-	-	-	-	400	-	-	-	-	-	-	-	-	-	-																											
				-	-	-	-	-	350	-	-	-	-	-	-	-	-	-	-																											
				-	-	-	-	-	250	-	-	-	-	-	-	-	-	-	-																											

车削工序 Turning operation	选择优先级 Priority of choice	Cu alloys																																												
		8016				8030				HF7				PKD																																
		S.. C.. W..	T.. D.. K..	V.. (L.)	R..	S.. C.. W..	T.. D.. K..	V.. (L.)	R..	S.. C.. W..	T.. D.. K..	V.. (L.)	R..	S.. C.. W..	T.. D.. K..	V.. (L.)	R..																													
精车 Fine turning	I	-	-	-	-	-	-	-	-	-	-	-	-	-	-	-	-																													
	II	-	-	-	-	-	-	-	-	-	-	-	-	-	-	-	-																													
	III	-	-	-	-	-	-	-	-	-	-	-	-	-	-	-	-																													
精加工 Finishing	I	500	-	-	-	-	-	-	-	400	-	-	-	600	-	-	-																													
	II	450	-	-	-	-	-	-	-	360	-	-	-	500	-	-	-																													
	III	400	-	-	-	-	-	-	-	300	-	-	-	450	-	-	-																													
半精加工 Semi-roughing	I	400	-	-	-	-	-	-	-	350	-	-	-	450	-	-	-																													
	II	360	-	-	-	-	-	-	-	320	-	-	-	400	-	-	-																													
	III	300	-	-	-	-	-	-	-	260	-	-	-	370	-	-	-																													
粗加工 Roughing	I	300	-	-	-	-	-	-	-	260	-	-	-	370	-	-	-																													
	II	280	-	-	-	-	-	-	-	230	-	-	-	350	-	-	-																													
	III	260	-	-	-	-	-	-	-	220	-	-	-	330	-	-	-																													
重型粗加工 Heavy roughing	I	-	-	-	-	-	-	-	-	-	-	-	-	-	-	-	-																													
	II	-	-	-	-	-	-	-	-	-	-	-	-	-	-	-	-																													
	III	-	-	-	-	-	-	-	-	-	-	-	-	-	-	-	-																													
切断，割槽 Parting, grooving		-	-	-	-	-	-	250	-	-	-	-	-	-	-	-	-																													
		-	-	-	-	-	-	200	-	-	-	-	-	-	-	-	-																													
		-	-	-	-	-	-	150	-	-	-	-	-	-	-	-	-																													
		-	-	-	-	-	-	100	-	-	-	-	-	-	-	-	-																													
端面和内部凹槽 Front and internal recesses		-	-	-	-	-	-	200	-	-	-	-	-	-	-	-	-																													
		-	-	-	-	-	-	180	-	-	-	-	-	-	-	-	-																													
		-	-	-	-	-	-	140	-	-	-	-	-	-	-	-	-																													
		-	-	-	-	-	-	100	-	-	-	-	-	-	-	-	-																													
螺纹加工 Threading		-	-	-	-	-	300	-	-	-	-	-	-	-	-	-	-																													
		-	-	-	-	-	250	-	-	-	-	-	-	-	-	-	-																													
		-	-	-	-	-	200	-	-	-	-	-	-	-	-	-	-																													

N

铝、铜合金
Al, Cu alloys

速度因子 k_{vx} Speed factor k_{vx}	
锻造和铸造氧化皮 Skin of forging and casting	0,70-0,80
I内圆车削 nternal turning	0,75-0,85
I断续切削 nterrupted cut	0,80-0,90
良好的机床状况 Good machine conditions	1,05-1,20
恶劣的机床状况 Bad machine conditions	0,85-0,95

铝合金 / Al alloys

材料 / Material	k_{vN}
锻造铝合金，未硬化，HB 60 Wrought Al alloys not hardened HB 60	2,6
锻造铝合金，已硬化，HB 100 Wrought Al alloys hardened HB 100	1,0
锻造铝合金，未硬化，HB 75 Wrought Al alloys not hardened HB 75	0,9
锻造铝合金，已硬化，HB 90 Wrought Al alloys hardened HB 90	0,6
铸造铝合金，未硬化，HB 130 >12%Si casted Al alloys, not hardened HB 130 >12%Si	PKD

铜合金 / Cu alloys

材料 / Material	k_{vN}
铅黄铜 (>1%Pb) Leaded brass (>1%Pb)	1,8
黄铜 HB 90 Bass HB 90	1,0
青铜，电解铜 Bronze electrolytic Cu	0,7

表 12a Table No. 12a 初始切削工况选择 CHOICE OF INITIAL CUTTING CONDITIONS

加工材料，ISO 主要材料组 Machined material, the main ISO group	符合 ISO 标准的刀片类型 CUTTING INSERTS TYPE according to ISO			车削切削工况 / CUTTING CONDITIONS FOR TURNING																									
				精车 Fine turning				精加工 Finishing				半精加工 Semi-roughing				粗加工 Roughing				重型粗加工 Heavy roughing				切断，割槽 Parting, grooving				螺纹加工 Threading	
				f = 0,05 ÷ 0,1 [mm/转] f = 0,05 ÷ 0,1 [mm.rev⁻¹]				f = 0,1 ÷ 0,2 [mm/转] f = 0,1 ÷ 0,2 [mm.rev⁻¹]				f = 0,2 ÷ 0,4 [mm/转] f = 0,2 ÷ 0,4 [mm.rev⁻¹]				f = 0,4 ÷ 0,8 [mm/转] f = 0,4 ÷ 0,8 [mm.rev⁻¹]				f > 1,0 [mm/转] f > 1,0 [mm.rev⁻¹]				f = 0,05 ÷ 0,3 [mm/转] f = 0,05 ÷ 0,3 [mm.rev⁻¹]				-	
				经过预加工的表面非断续切削 Pre-machined surface non-interrupted cut		铸件、锻件断续切削 casting, forging interrupted cut		经过预加工的表面非断续切削 Pre-machined surface non-interrupted cut		铸件、锻件断续切削 casting, forging interrupted cut		经过预加工的表面非断续切削 Pre-machined surface non-interrupted cut		铸件、锻件断续切削 casting, forging interrupted cut		经过预加工的表面非断续切削 Pre-machined surface non-interrupted cut		铸件、锻件断续切削 casting, forging interrupted cut		经过预加工的表面非断续切削 Pre-machined surface non-interrupted cut		铸件、锻件断续切削 casting, forging interrupted cut		外围凹槽和切断 peripheral recess and cut-off		前端凹槽和切断 Front recess and cut-off		-	
S	..A ..M ..G ..U ..N		CNMA CNMM CNMG DNMA DNMM DNMG DNMU SNMA SNMM SNMG SNMX TNMA TNMM TNMG VNMU RNMA RNMM RNMG WNMA WNMM WNMG	I	8016 FF	I	8030 F	I	8016 FF, F	I	8030 F, SI	I	9230 FM, SI	I	8030 SI	I	9230 NR2	I	9235 NR2	I		I		I		I		I	
				II	8016 F	II	8016 F	II	9230 SI	II	9235 FM, NM	II	9230 NR2 (OR)	II	9230 NR2 (OR)	II	9235 NR2 (OR)	II	9230 NR2 (OR)	II		II		II		II		II	
				III		III	8016 FF	III	8030 SI	III	9230 F (SI)	III	9235 NM	III	6640 OR	III	6640 NR2 (OR)	III	6640 NR2 (OR)	III		III		III		III		III	
	..X		KNUX	I		I		I		I		I	9230 72	I	9230 72	I	6640 73	I		I		I		I		I		I	
				II		II		II		II		II	6615 73	II	6640 74	II	6640 74 (78)	II		II		II		II		II		II	
	..W ..T		CCMW CCMT SCMW SCMT DCMW DCMT TCMW TCMT VCMW VCMT WCMW WCMT RCMW RCMT RCMX	I	8016 UM	I	8016 UM	I	9210 UR	I	9230 UR	I	9210 UR	I	9230 UR	I		I		I		I		I		I		I	
				II	9230 SI	II	8030 SI	II	9230 UR	II	8030 UR	II	9230 UR	II	8030 UR	II		II		II		II		II		II		II	
				III	9230 UR	III	8030 UR	III		III	8030 SI	III	9230 SI	III	8030 SI	III		III		III		III		III		III		III	
	..R ..N		SPMR SPGR SPUN SPGN TPMR TPGR TPUN TPGN	I		I		I		I		I	9230 61	I	6640 61	I		I		I		I		I		I		I	
				II		II		II		II		II		II		II		II		II		II		II		II		II	
				III		III		III		III		III		III		III		III		III		III		III		III		III	
	..X		LFMX, LFUX, LCMX TN16E	I	8030	I	8030	I	8030	I	8030	I	8030	I	8030	I		I		I		I		I	8030	I	8030	I	
				II	-	II	-	II	6640	II	6640	II	6640	II	6640	II		II		II		II		II	6640	II	6640	II	
			TN11... TN16... TN22	I		I		I		I		I		I		I		I		I		I		I		I		I	8030

车削工序 Turning operation	选择优先级 Priority of choice	进给量 f [mm/转] Feed f [mm.rev⁻¹]	切深 a_p [mm] Depth of cut a_p [mm]	9230 S.. C.. W..	9230 T.. D.. K..	9230 V.. (L.)	9230 R..	9235 S.. C.. W..	9235 T.. D.. K..	9235 V.. (L.)	9235 R..	6630 S.. C.. W..	6630 T.. D.. K..	6630 V.. (L.)	6630 R..	6640 S.. C.. W..	6640 T.. D.. K..	6640 V.. (L.)	6640 R..	8016 S.. C.. W..	8016 T.. D.. K..	8016 V.. (L.)	8016 R..	8030 S.. C.. W..	8030 T.. D.. K..	8030 V.. (L.)	8030 R..	8040 S.. C.. W..	8040 T.. D.. K..	8040 V.. (L.)	8040 R..	寿命因子 / Life factor
精车 Fine turning	I	0,05		-	-	-	-	-	-	-	-	-	-	-	-	-	-	-	-	-	-	-	-	-	-	-	-	-	-	-	-	V_{15} [m.min⁻¹]
	II	0,08	0,5	-	-	-	-	-	-	-	-	-	-	-	-	-	-	-	-	-	-	-	-	-	-	-	-	-	-	-	-	
	III	0,10		-	-	-	-	-	-	-	-	-	-	-	-	-	-	-	-	-	-	-	-	-	-	-	-	-	-	-	-	
精加工 Finishing	I	0,10		-	-	-	-	-	-	-	-	-	-	-	-	70	65	55	75	60	56	53	65	55	50	48	60	50	45	44	55	
	II	0,15	1,5	95	90	85	105	80	75	70	90	80	75	70	90	65	60	50	70	55	52	50	60	50	45	43	55	45	40	38	50	
	III	0,20		85	80	75	95	75	70	65	85	75	70	70	85	60	55	40	65	50	47	45	55	45	43	40	50	40	35	33	44	
半精加工 Semi-roughing	I	0,20		80	80	70	90	70	70	65	80	75	70	65	80	55	50	45	60	45	42	40	50	40	35	33	45	35	30	28	40	
	II	0,30	2,5	70	70	-	80	65	65	-	75	70	65	-	75	50	45	-	55	40	38	35	45	35	30	28	40	30	28	26	33	
	III	0,40		65	60	-	70	65	60	-	70	65	60	-	70	45	40	-	50	30	28	-	33	30	25	-	35	25	23	-	28	
粗加工 Roughing	I	0,40		60	55	-	65	60	55	-	65	65	50	-	65	45	40	-	50	40	38	-	45	35	33	-	40	30	28	-	35	
	II	0,60	5,0	50	50	-	55	55	50	-	60	60	45	-	60	40	35	-	45	35	33	-	40	30	28	-	33	25	23	-	28	
	III	0,80		45	45	-	50	50	50	-	55	55	40	-	55	35	30	-	40	30	28	-	35	25	23	-	28	20	18	-	22	
重型粗加工 Heavy roughing	I	0,80		-	-	-	-	-	-	-	-	-	-	-	-	-	-	-	-	-	-	-	-	-	-	-	-	-	-	-	-	V_{45} [m.min⁻¹]
	II	1,00	12,0	-	-	-	-	-	-	-	-	-	-	-	-	-	-	-	-	-	-	-	-	-	-	-	-	-	-	-	-	
	III	1,30		-	-	-	-	-	-	-	-	-	-	-	-	-	-	-	-	-	-	-	-	-	-	-	-	-	-	-	-	
切断、割槽 Parting, grooving		0,10	-	-	-	-	-	-	-	-	-	-	-	-	-	-	-	50	-	-	-	-	-	-	-	30	-	-	-	-	-	V_{15} [m.min⁻¹]
		0,15	-	-	-	-	-	-	-	-	-	-	-	-	-	-	-	40	-	-	-	-	-	-	-	25	-	-	-	-	-	
		0,20	-	-	-	-	-	-	-	-	-	-	-	-	-	-	-	30	-	-	-	-	-	-	-	20	-	-	-	-	-	
		0,30	-	-	-	-	-	-	-	-	-	-	-	-	-	-	-	25	-	-	-	-	-	-	-	20	-	-	-	-	-	
端面和内部凹槽 Front and internal recesses		0,10	-	-	-	-	-	-	-	-	-	-	-	-	-	-	-	30	-	-	-	-	-	-	-	20	-	-	-	-	-	
		0,15	-	-	-	-	-	-	-	-	-	-	-	-	-	-	-	25	-	-	-	-	-	-	-	18	-	-	-	-	-	
		0,20	-	-	-	-	-	-	-	-	-	-	-	-	-	-	-	20	-	-	-	-	-	-	-	15	-	-	-	-	-	
		0,30	-	-	-	-	-	-	-	-	-	-	-	-	-	-	-	18	-	-	-	-	-	-	-	15	-	-	-	-	-	
螺纹加工 Threading				-	-	-	-	-	-	-	-	-	-	-	-	-	-	-	-	-	-	-	-	-	-	20	-	-	-	-	-	
				-	-	-	-	-	-	-	-	-	-	-	-	-	-	-	-	-	-	-	-	-	-	15	-	-	-	-	-	
				-	-	-	-	-	-	-	-	-	-	-	-	-	-	-	-	-	-	-	-	-	-	10	-	-	-	-	-	

S

耐热和耐蠕变合金
镍、钴、铁和钛
Heat-resistant and creep-resistant alloys
Ni, Co, Fe and Ti

速度因子 k_{vx}
Speed factor k_{vx}

锻造和铸造氧化皮 Skin of forging and casting	0,70-0,80
I内圆车削 nternal turning	0,75-0,85
I断续切削 nterrupted cut	0,80-0,90
良好的机床状况 Good machine conditions	1,05-1,20
恶劣的机床状况 Bad machine conditions	0,85-0,95

合金类型因子 k_{vN}
Alloy type factor k_{vN}

	k_{vN}		k_{vN}
10	1,10	30	0,84
15	1,00	45	0,76
20	0,93	60	0,71

合金类型因子 k_{vN}
Alloy type factor k_{vN}

	k_{vN}		k_{vN}
Ti	2,3	Ni	1,0
Fe	1,25	Co	0,7

工件硬度因子
Work piece hardness factor

Ni [HB]	k_{vHB}	Co [HB]	k_{vHB}
230	1,05	200	1,30
250	1,00	250	1,14
280	0,92	300	1,00
320	0,84	320	0,95
350	0,79		

重型粗加工刀具寿命因子
Tool life factor for heavy roughing

Fe [HB]	k_{vHB}	Ti [Rm]	k_{Rm}
180	1,05	450	2,50
200	1,00	900	1,00
240	0,90	1100	0,90
280	0,83		

表 13a
Table No. 13a

初始切削工况选择
CHOICE OF INITIAL CUTTING CONDITIONS

加工材料，ISO 主要材料组 Machined material, the main ISO group	符合 ISO 标准的刀片类型 CUTTING INSERTS TYPE according to ISO			车削切削工况 / CUTTING CONDITIONS FOR TURNING																							
				精车 Fine turning				精加工 Finishing				半精加工 Semi-roughing				粗加工 Roughing				重型粗加工 Heavy roughing				切断，割槽 Parting, grooving				螺纹加工 Threading	
				f = 0.05 ÷ 0.1 [mm/转] f = 0.05 ÷ 0.1 [mm.rev⁻¹]				f = 0.1 ÷ 0.2 [mm/转] f = 0.1 ÷ 0.2 [mm.rev⁻¹]				f = 0.2 ÷ 0.4 [mm/转] f = 0.2 ÷ 0.4 [mm.rev⁻¹]				f = 0.4 ÷ 0.8 [mm/转] f = 0.4 ÷ 0.8 [mm.rev⁻¹]				f > 1.0 [mm/转] f > 1.0 [mm.rev⁻¹]				f = 0.05 ÷ 0.3 [mm/转] f = 0.05 ÷ 0.3 [mm.rev⁻¹]				-	
				经过预加工的表面非断续切削 Pre-machined surface non-interrupted cut		铸件、锻件断续切削 casting, forging interrupted cut		经过预加工的表面非断续切削 Pre-machined surface non-interrupted cut		铸件、锻件断续切削 casting, forging interrupted cut		经过预加工的表面非断续切削 Pre-machined surface non-interrupted cut		铸件、锻件断续切削 casting, forging interrupted cut		经过预加工的表面非断续切削 Pre-machined surface non-interrupted cut		铸件、锻件断续切削 casting, forging interrupted cut		经过预加工的表面非断续切削 Pre-machined surface non-interrupted cut		铸件、锻件断续切削 casting, forging interrupted cut		外围凹槽和切断 peripheral recess and cut-off		前端凹槽和切断 Front recess and cut-off		-	
H	..A ..M ..G ..U ..N		CNMA CNMM CNMG DNMA DNMM DNMG DNMU SNMA SNMM SNMG SNMX TNMA TNMM TNMG VNMU RNMA RNMM RNMG WNMA WNMM WNMG	I	6605 R	I	8030 R	I	6605 R	I	8030 R	I		I		I		I		I		I		I		I		I	
				II	PB2	II	PB2	II	PB2	II	PB2	II		II		II		II		II		II		II		II		II	
				III	6620	III		III	6620 M(R)	III		III		III		III		III		III		III		III		III		III	
	..X		KNUX	I		I		I		I		I		I		I		I		I		I		I		I		I	
				II		II		II		II		II		II		II		II		II		II		II		II		II	
	..W ..T		CCMW CCMT SCMW SCMT DCMW DCMT TCMW TCMT VCMW VCMT WCMW WCMT RCMW RCMT RCMX	I	6605 46, 47, 48	I	8016	I	6605 46, 47, 48	I	8016	I		I		I		I		I		I		I		I		I	
				II	8016	II	6605	II	8016	II	6605	II		II		II		II		II		II		II		II		II	
				III	6605	III		III	6605	III		III		III		III		III		III		III		III		III		III	
	..R ..N		SPMR SPGR SPUN SPGN TPMR TPGR TPUN TPGN	I	8016	I	8016	I	6605 46	I	8016	I		I		I		I		I		I		I		I		I	
				II	6605	II		II	8016	II		II		II		II		II		II		II		II		II		II	
				III		III		III		III		III		III		III		III		III		III		III		III		III	
	..X		LFMX, LFUX, LCMX TN16E	I	8030	I	8030	I	8030	I	8030	I		I		I		I		I		I		I	8030	I	8030	I	
				II		II		II		II		II		II		II		II		II		II		II		II		II	
	x		TN11... TN16... TN22	I		I		I		I		I		I		I		I		I		I		I		I		I	8030

H

热处理钢，冷硬铸铁
Heat treated steel, chilled cast iron

速度因子 k_{vx}
Speed factor k_{vx}

锻造和铸造氧化皮 Skin of forging and casting	0.70-0.80
I内圆车削 nternal turning	0.75-0.85
I断续切削 nterrupted cut	0.80-0.90
良好的机床状况 Good machine conditions	1.05-1.20
恶劣的机床状况 Bad machine conditions	0.85-0.95

工件材料因子
Work piece material factor

材料 Material	硬度 Hardness	6620, 8016, 8030	PKBN
热处理钢 Heat tread st.	HRC 55-60	1,0	1,0
冷硬铸铁 Chiled cast iron	Hsh 55-70	0,5	1,0
	Hsh 70-80	-	0,7

车削工序 Turning operation	选择优先级 Priority of choice	进给量和切深范围 Ran. of feeds and depth of cut 进给量 f [mm/转] Feed f [mm.rev⁻¹]	切深 a_p [mm] Depth of cut a_p [mm]	6605 S.. C.. W..	6605 T.. D.. K..	6605 V.. (L.)	6605 R..	6620 S.. C.. W..	6620 T.. D.. K..	6620 V.. (L.)	6620 R..	8016 S.. C.. W..	8016 T.. D.. K..	8016 V.. (L.)	8016 R..	8030 S.. C.. W..	8030 T.. D.. K..	8030 V.. (L.)	8030 R..	PB2 S.. C.. W..	PB2 T.. D.. K..	PB2 V.. (L.)	PB2 R..	寿命因子 / Life factor
精车 Fine turning	I	0.05						-	-	-	-	-	-	-	-	-	-	-	-	-	-	-	-	V_{15} [m.min⁻¹]
	II	0.08	0.5					-	-	-	-	-	-	-	-	-	-	-	-	-	-	-	-	
	III	0.10						-	-	-	-	-	-	-	-	-	-	-	-	-	-	-	-	
精加工 Finishing	I	0.10		85	80	75	95	60	56	-	70	60	55	-	70	55	52	-	60	110	105	95	120	
	II	0.15	1.5	75	70	65	80	50	45	-	55	50	45	-	55	45	42	-	50	100	95	90	110	
	III	0.20		65	65	60	75	45	42	-	50	45	42	-	50	40	38	-	45	90	85	80	100	
半精加工 Semi-roughing	I	0.20		65	60	55	70	45	42	-	50	45	42	-	50	40	38	-	45	90	85	80	100	
	II	0.30	2.5	55	55	50	60	40	38	-	45	40	38	-	45	30	28	-	35	80	75	70	90	
	III	0.40		-	-	-	-	-	-	-	-	-	-	-	-	-	-	-	-	-	-	-	-	
粗加工 Roughing	I	0.40		-	-	-	-	-	-	-	-	-	-	-	-	-	-	-	-	-	-	-	-	
	II	0.60	5.0	-	-	-	-	-	-	-	-	-	-	-	-	-	-	-	-	-	-	-	-	
	III	0.80		-	-	-	-	-	-	-	-	-	-	-	-	-	-	-	-	-	-	-	-	
重型粗加工 Heavy roughing	I	0.80		-	-	-	-	-	-	-	-	-	-	-	-	-	-	-	-	-	-	-	-	V_{45} [m.min⁻¹]
	II	1.00	12.0	-	-	-	-	-	-	-	-	-	-	-	-	-	-	-	-	-	-	-	-	
	III	1.30		-	-	-	-	-	-	-	-	-	-	-	-	-	-	-	-	-	-	-	-	
切断，割槽 Parting grooving		0.10	-	-	-	-	-	-	-	-	-	-	-	-	-	-	-	20	-	-	-	-	-	V_{15} [m.min⁻¹]
		0.15	-	-	-	-	-	-	-	-	-	-	-	-	-	-	-	10	-	-	-	-	-	
		0.20	-	-	-	-	-	-	-	-	-	-	-	-	-	-	-	-	-	-	-	-	-	
		0.30	-	-	-	-	-	-	-	-	-	-	-	-	-	-	-	-	-	-	-	-	-	
前面和内部凹槽 Front and internal recesses		0.10	-	-	-	-	-	-	-	-	-	-	-	-	-	-	-	15	-	-	-	-	-	
		0.15	-	-	-	-	-	-	-	-	-	-	-	-	-	-	-	8	-	-	-	-	-	
		0.20	-	-	-	-	-	-	-	-	-	-	-	-	-	-	-	-	-	-	-	-	-	
		0.30	-	-	-	-	-	-	-	-	-	-	-	-	-	-	-	-	-	-	-	-	-	
螺纹加工 Threading				-	-	-	-	-	-	-	-	-	-	-	-	-	45	-	-	-	-	-	-	
				-	-	-	-	-	-	-	-	-	-	-	-	-	40	-	-	-	-	-	-	
				-	-	-	-	-	-	-	-	-	-	-	-	-	30	-	-	-	-	-	-	

车削表面质量

加工表面的粗糙度取决于进给量 f 和可转位刀片的刀尖圆弧半径 r_ε 。轮廓高度最大值 Rmax 见下面的表 14。

Surface quality at turning

The roughness of machined surface depends on feed rate f and nose radius of indexable cutting insert r_ε . Max. height of profile Rmax is stated in following *table no. 14*.

表 14 *Table No. 14*

刀尖半径 Nose radius	表面质量 - R_a [µm] / **Surface quality - R_a [µm]** 进给量 f [mm/转] / **Feed f [mm.rev^{-1}]**							
	0.10	**0.12**	**0.16**	**0.20**	**0.25**	**0.30**	**0.35**	**0.40**
0.2	2.7	3.9	6.7	10.1	15.4	-	-	-
0.4	1.4	2.0	3.4	5.2	7.9	11.1	14.8	-
0.5	1.1	1.6	2.7	4.2	6.3	8.9	11.9	15.3
0.8	0.7	1.0	1.8	2.6	4.0	5.7	7.6	9.7
1.0	0.6	0.8	1.4	2.1	3.2	4.6	6.0	7.8
1.2		0.65	1.2	1.8	2.7	3.8	5.1	6.6
1.5			0.95	1.4	2.2	3.1	4.1	5.3
1.6			0.9	1.35	2.0	2.9	3.9	5.2
2.4			0.6	0.9	1.4	1.9	2.6	3.4

表格中列出的表面粗糙度 R_a 值适用于用较小切削刃采用较大主偏角 κ_r' 的可转位刀片 (刀片形状 T...、S...、D....、K...、V...) 进行车削的工况。表面粗糙度 R_a 在使用槽型为 C…、W… 的刀片和主要用修光刃槽型的刀片 (刀具的主偏角 κ_r = 90 - 95°) 进行车削时要好于表格中所列的值，这是因为较小切削刃的主偏角 κ_r' 低。在这种情况下，轮廓高度最大值 R_{max} 减至 $R_{max3} < R_{max2} < R_{max1}$，如下图 6 所示。

Values of surface finish $\mathbf{R_a}$ stated in this table apply for turning by cutting indexable inserts with bigger setting angles of minor cutting edge $\boldsymbol{\kappa_r'}$ (inserts shapes **T..., S..., D...., K..., V...**). The surface finish $\mathbf{R_a}$ is better than values mentioned in table at turning by cutting inserts shapes C…, W… and primarily by inserts with **WIPER** geometry (tools with setting angle κ_r = 90 ÷ 95°). The reason is the low value of setting angles of minor cutting edge $\boldsymbol{\kappa_r'}$. In this case the value of max. height of profile $\mathbf{R_{max}}$ is reduced to $\mathbf{R_{max3} < R_{max2} < R_{max1}}$ as you can see on following *picture no. 6*.

图 6 *Picture No. 6*

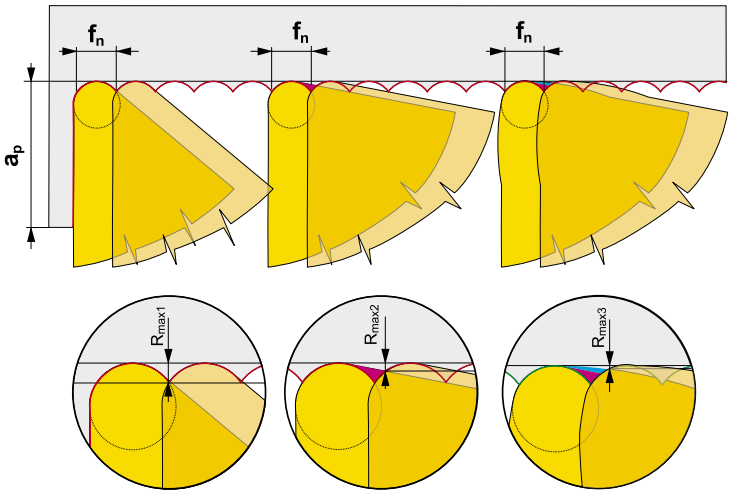

PRAMET

图片 / Picture	积屑瘤	BUILT-UP EDGE
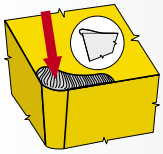	问题描述和原因： 切削刃上有加工材料粘滞，在脱落时会导致切削刃的脆裂，并使表面质量恶化。	Description and cause: Sticking of machined material on the cutting edge. Its tear-off can cause the brittle crack of the edge, consequently the surface quality gets worse.
	问题与对策： - 提高切削速度 - 提高进给率 - 使用带涂层牌号 - 不使用冷却液 - 选择一种切削更轻快的断屑槽	Troubleshooting: - increase the cutting speed - increase the feed rate - use coated grade - no coolant - select a more easy cutting chip breaker

图片 / Picture	后刀面磨损	FLANK WEAR
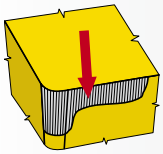	问题描述和原因： 后刀面磨损是评判刀具寿命的主要标准之一。它因刀片与加工材料摩擦而产生。不可能将其完全消除，只能减少。	Description and cause: Flank wear is one of the main criteria of tool life. It appears due to friction of insert to the machined material. It is not possible to fully eliminate it, just to reduce.
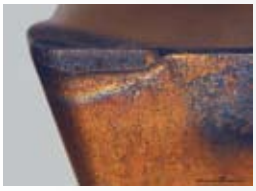	问题与对策： - 使用更耐磨的牌号 - 降低切削速度 - 提高进给率 (如果进给量低于 0.1 mm/转) - 使用冷却液或增加冷却强度	Troubleshooting: - use more wear resistant grade - reduce the cutting speed - increase the feed rate (if it is under 0,1 mm.rev^{-1}) - use coolant or increase the intensity of cooling

图片 / Picture	月牙洼磨损	CRATERING
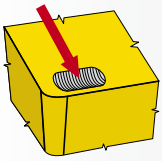	问题描述和原因： 月牙洼磨损通常出现在带平面的刀片上。	Description and cause: Cratering appears usually on inserts with plain face.
	问题与对策： - 使用更耐磨的牌号 - 降低切削速度 - 使用冷却液或增加冷却强度 - 降低进给率	Troubleshooting: - use more wear resistant grade - reduce the cutting speed - use coolant or increase the intensity of cooling - reduce the feed rate

表 15 / Table No. 15 — 车削刀片的磨损形式 / WEAR TYPES OF TURNING INSERTS

图片 / Picture	较小切削刃上的氧化沟	OXIDATION GROOVE ON THE MINOR EDGE
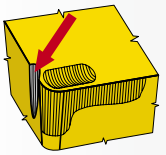	问题描述和原因： 这是限制刀具寿命的主要问题。通常出现在车削时。氧化沟和月牙洼磨损同时出现会导致加工表面粗糙。	Description and cause: The main criterion which limits the tool life. It usually appears at turning. A combination of oxidation groove and cratering causes worse roughness of the machined surface.
	问题与对策： - 使用带涂层或更耐磨的牌号，如果可能使用氧化铝 (Al_2O_3) 涂层刀片 - 使用冷却液或增加冷却强度 - 降低切削速度	Troubleshooting: - use coated or more wear resistant grade, if possible use Al_2O_3 coated inserts - use coolant or increase the intensity of cooling - reduce the cutting speed

图片 / Picture	塑性变形	PLASTIC DEFORMATION
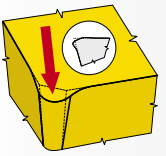	问题描述和原因： 由切削刃上的高热应力引起（高进给量和切削速度）。	Description and cause: It is caused by high thermal stress of the cutting edge (high feed and cutting speed).
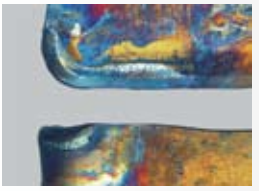	问题与对策： - 使用更耐磨的牌号 - 降低切削速度 - 降低进给率 - 使用冷却液或增加冷却强度 - 使用圆角半径更大的刀片 - 使用刀尖角度更大的刀片	Troubleshooting: - use more wear resistant grade - reduce the cutting speed - reduce the feed rate - use a coolant or increase the intensity of cooling - use cutting inserts with bigger corner radius - use cutting insert with bigger corner angle

图片 / Picture	沟槽磨损	NOTCH WEAR
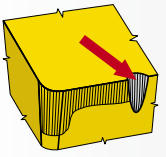	问题描述和原因： 在切削刃与工件表面的接触区产生。主要由工件表层硬化和毛刺引起。通常出现在奥氏体不锈钢中。	Description and cause: It is created in area of contact of the cutting edge with the surface of the work piece. It is mainly caused by hardening of the surface layer of work piece and burrs. Usually appears at stainless austenitic steels.
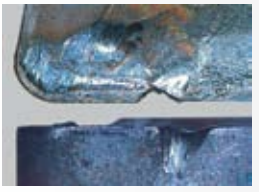	问题与对策： - 使用带涂层或更耐磨的牌号，如果可能使用氧化铝 (Al_2O_3) 涂层刀片 - 选择主偏角更小的刀具 - 降低切削速度 - 降低进给率	Troubleshooting: - use coated or more wear resistant grade, if possible use Al_2O_3 coated inserts - select a tool with a smaller setting angle - reduce the cutting speed - reduce the feed rate

图片 / Picture	切削刃崩裂	CHIPPING OF CUTTING EDGE
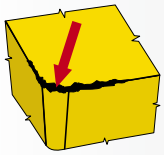	问题描述和原因： 主要与另一种磨损形式一起出现。 因机床-刀具-工件的刚度低或 硬切屑成形导致。	Description and cause: It mainly appears together with another type of wear. It is caused by low rigidity of machine-tool-work piece or hard chip forming.
	问题与对策： - 提高切削速度 - 降低进给率 - 选择强度更高的断屑槽 - 使振动最小化。 - 选择韧性更好的牌号	Troubleshooting: - increase the cutting speed - reduce the feed rate - select a stronger chip breaker - minimize the vibrations - select a tougher grade

图片 / Picture	切削刃崩裂 (退出切削)	CHIPPING OF CUTTING EDGE (OUT OF CUT)
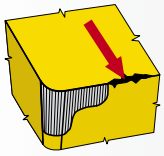	问题描述和原因： 由切屑成形困难导致。切屑损坏切削刃。	Description and cause: It is caused by inconvenient chip forming. The chips damage the edge.
	问题与对策： - 改变进给率 - 选择不同主偏角的刀具 - 使用不同的刀片槽型 - 使用韧性更好的牌号	Troubleshooting: - change the feed rate - select a tool with a different setting angle - use different geometry of insert - use tougher grade

图片 / Picture	梳状裂纹	COMB CRACKS
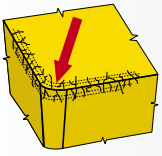	问题描述和原因： 由断续切削时切削刃上的高热应力引起。	Description and cause: It is caused by high thermal stress of the cutting edge at interrupted cut.
	问题与对策： - 使用足够流量的冷却液或关闭冷却液。 - 降低切削速度 - 降低进给率 - 使用韧性更好的牌号	Troubleshooting: - use an abundant flow of coolant or shut off the coolant - reduce the cutting speed - reduce the feed rate - use tougher grade

表 15 车削刀片的磨损形式
Table No. 15 WEAR TYPES OF TURNING INSERTS

图片 / Picture	沿后刀面的裂纹	CRACKS ALONG THE FLANK
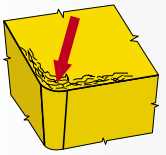	问题描述和原因： 由切削刃后面区域上的高动态应力引起。	Description and cause: It is caused by high dynamic stress of the area behind cutting edge.
	问题与对策： - 使用韧性更好的牌号 - 改变切削工况 - 使用不同的刀片槽型或具有不同切削刃工况 (...T、....S、....K、....P) 的不同刀片 - 改变进给量	Troubleshooting: - use tougher grade - change the cutting conditions - use different geometry of insert or inserts with different cutting edge condition (...T, ...S, ...K, ...P) - change the feed

图片 / Picture	刀片崩损	INSERT FRACTURE
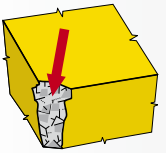	问题描述和原因： 这种磨损形式的出现原因很明显，取决于工件材料、牌号、工况以及机床-刀具-工件刚度、伸出情况和磨损形式、切削工况。	Description and cause: Causes of this wear type can be various, depends on work piece material, grade, condition and rigidity of machine-tool-work piece, extend and type of wear, cutting conditions.
	问题与对策： - 使用韧性更好的牌号 - 降低进给量和切削深度 - 使用圆角半径更大的刀片 - 使用刀尖角度更大的刀片 - 选择强度更高的断屑槽 - 选择较厚的刀片。	Troubleshooting: - use the tougher grade - reduce the feed and depth of cut - use the insert with bigger corner radius - use cutting insert with bigger corner angle - select a stronger chip breaker - select a thicker insert

图片 / Picture	表面质量差	POOR SURFACE QUALITY
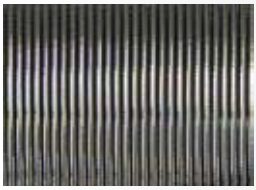	问题描述和原因： 原因很明显，取决于工件材料、切削工况（进给量和切削速度）、切削刃状态、伸出和磨损形式、机床-刀具-工件的状况和刚度。 - 选错刀具 - 错误的切屑厚度 - 错误的切削速度 - 需要冷却液 - 高进给率	Description and cause: Causes are various, depend on work piece material, cutting conditions (feed and cutting speed), cutting edge condition, extend and type of wear, condition and rigidity of machine-tool-work piece. - wrong choice of tool - wrong chip thickness - wrong cutting speed - coolant is needed - high feed rate
	问题与对策： - 使用修光刃刀片 - 使用具有正确槽型的刀片 - 降低进给率 - 改变 (通常增加) 切削速度 - 使用冷却液 - 提高刀体与工件的稳定性。 - 改变切屑横截面 - 选择一种切削更轻快的断屑槽 - 增大刀尖半径	Troubleshooting: - use wiper insert - use cutting insert with the right geometry - reduce the feed rate - change (usually increase) the cutting speed - use a coolant - improve the stability of the tool and work piece - change the chip cross section - select a more easy cutting chip breaker - increase the nose radius

图片 / Picture	振动	VIBRATIONS
	问题描述和原因： 该问题出现非常频繁。主要原因是工件或刀具不平衡、工件的纯稳定、高切削力、刀具悬伸。	Description and cause: It is very frequent. The main reasons are an unbalanced work piece or tool, pure stability of work piece, high rate of cutting forces, tool overhang.
	问题与对策： - 提高刀体与工件的稳定性。 - 降低切削深度 - 将刀具悬伸减至最小 - 降低切削速度 - 使用主偏角更小的刀具 - 降低切屑横截面 - 使用切削阻力小的刀具 - 提高进给率 - 选择一种切削更轻快的断屑槽 - 增大刀尖半径	Troubleshooting: - improve the stability of the tool and work piece - reduce the depth of cut - minimize tool overhang - reduce the cutting speed - use the tool with smaller setting angle - reduce the chip cross section - use the tool with low cutting resistance - increase the feed rate - select a more easy cutting chipbreaker - increase the nose radius

表 16 Table No. 16 — 不良现象 UNDESIRABLE PHENOMENA

图片 / Picture	毛刺	BURR
	问题描述和原因： 通常出现在软钢和塑性材料的加工中。	Description and cause: It usually appears at machining of soft steels and plastic materials.
	问题与对策： - 使用具有锋利切削刃的刀片 - 使用具有正前角槽型的刀片 - 使用主偏角更小的刀具	Troubleshooting: - use cutting insert with sharp cutting edge - use cutting insert with positive geometry - use tool with smaller setting angle

图片 / Picture	工件的尺寸和形状误差	DIMENSIONAL AND SHAPE INACCURACY OF WORK PIECE
	问题描述和原因： 取决于许多因素。	Description and cause: Depends on a number of factors.
	问题与对策： - 使用耐磨刀片 - 提高刀具和工件的稳定性，减小刀具悬伸 - 使用具有合适加工余量的工件	Troubleshooting: - use wear resistant cutting insert - improve the stability of the tool and work piece, minimize tool overhang - use work piece with suitable machining allowance

图片 / Picture	不可接受的切屑控制	UNACCEPTABLE CHIP CONTROL
	问题描述和原因： 合适的切屑形状对于刀具耐久性(寿命)等是重要的指标之一。工件材料、进给量、切深、合适的切削槽型(断屑槽)都影响正确的切屑成形。长切屑无法接受，但也不期望出现太短的切屑(压碎)，因为这意味着切削刃过载且会导致振动。	Description and cause: A suitable shape of chip is an important criterion, such as durability (tool life). Work piece material, feed, depth of cut, suitable cutting geometry (chip breaker) effect on the right chip forming. Long chip is unacceptable however too short chip (crushed) is unwanted, is indicative of overloaded edge and causes vibrations.
	问题与对策： - 改变进给量和切削深度 - 使用更合适的切削槽型 - 改变切削工况	Troubleshooting: - change feed and depth of cut - use more suitable cutting geometry - change cutting conditions

一般原则	GENERAL PRINCIPLES
检查刀片座状况 在需要夹紧新的刀片或改变切削刃 (刀片的旋向) 以净化刀片座之前，检查刀片座状况或刀垫和楔块的状况 (特别是刀片刀尖下方的损坏情况)。	Check of cutting insert seat condition Before clamping of new cutting insert or change of edge (rotation of cutting insert) is necessary to purge the seat, check its condition or condition of anvil and wedge (especially the damage under the corner of cutting insert).
夹紧部件的检查和维护 检查夹紧部件 – 夹紧杠杆、螺钉、楔块、夹子。只使用完好无损的部件，只使用原装部件 – 可以在样本中找到相关信息。定期润滑螺纹和螺钉的结合表面，如用耐热润滑剂 (Molyko G) 等。在进行安装和解体时，只使用我们在样本中规定的或制造商推荐的螺丝刀和扳手。注意正确拧紧 (成比例)，建议使用扭矩扳手。	Check and maintenance of clamping parts The checking of clamping parts – clamping levers, screws, wedges, clamps. Use only undamaged parts , use the original parts only – you find them in the catalogue. Regularly lubricate the threads and binding surface of screws, for example by heat-resistant lubricant (Molyko G). For mounting and disassembling, use only screw drivers and wrenches as per our catalogue or recommended by the tool producer. Pay attention to the right tightening (proportional), we recommend to use torque wrench.
检查拧紧情况 拧紧时，检查刀片在整个结合表面上的安装以及在径向与轴向的安装。刀片和刀体必须总是保持清洁，不得有损坏。	Check of tightening At tightening check the fitting of cutting insert on the whole binding surface and fitting in radial and axial direction. Cutting inserts and tools must be always clean and undamaged.

表 17 / Table No. 17 — 切削参数计算公式 / FORMULAE FOR CALCULATION OF CUTTING PARAMETERSFORMULAS

数量 Quantity	公式 Formula	单位 Unit	注意 Note
转速 **Number of revolutions**	$n = \frac{v_c \cdot 1000}{D \cdot \pi}$	[转/分钟] [1.min^{-1}]	n 转速 [转/分钟] D 直径 (刀具或工件) [mm] v_c 切削速度 [m/分钟] f_{rev} 每转进给量 [mm/转] f_{min} 每分钟进给量 (进给速度) [mm/分钟] **n** Number of revolutions [1.min^{-1}] **D** Diameter (of tool or workpiece) [mm] **v_c** Cutting speed [m.min^{-1}] **f_{rev}** Feed per revolution [mm.rev^{-1}] **f_{min}** Feed per minute (Speed of feed) [mm.min^{-1}]
切削速度 **Cutting speed**	$v_c = \frac{\pi \cdot D \cdot n}{1000}$	[m/分钟] [m.min^{-1}]	
每转进给量 **Feed per revolution**	$f_{ot} = \frac{f_{min}}{n}$	[mm/转] [mm.ot^{-1}]	
每分钟进给量 (进给速度) **Feed per minute (Speed of feed)**	$f_{min} = v_f = f_{ot} \cdot n$	[mm/分钟] [mm.min^{-1}]	
轮廓高度最大值 R_{max} **Max. height of profile R_{max}**	$R_{max} = \frac{125 \cdot f_{ot}^{2}}{r_\varepsilon}$	[µm]	R_{max} 轮廓高度最大值 [mm] R_a 表面粗糙度 [mm] f_{rev} 每转进给量 [mm/转] r_ε 刀尖半径 [mm] **R_{max}** max. height of profile [mm] **R_a** surface finish [mm] **f_{rev}** feed per revolution [mm.rev^{-1}] **r_ε** nose radius [mm]
表面粗糙度 R_a **Surface finish R_a**	$R_a = \frac{43{,}9 \cdot f_{ot}^{1{,}88}}{r_\varepsilon^{0{,}97}}$	[µm]	

PRAMET

数量 Quantity	公式 Formula	单位 Unit	注意 Note
切屑横截面 **Chip cross section**	$A = f_{rev} \cdot a_p$	[mm²]	A 切屑横截面 [mm²] f_{rev} 每转进给量 [mm/转] a_p 轴向切削深度 [mm] κ_r 主切削刃主偏角 [°] h 切屑厚度 [mm] v_c 切削速度 [m/分钟] f_{min} 每分钟进给量 (进给速度) [mm/分钟] Q 每分钟材料去除率 [cm³/分钟] **A** Chip cross section [mm²] **f_{rev}** Feed per revolution [mm.rev⁻¹] **a_p** Axial depth of cut [mm] **κ_r** Major edge setting angle [°] **h** Chip thickness [mm] **v_c** Cutting speed [m.min⁻¹] **f_{min}** Feed per minute (Speed of feed) [mm.min⁻¹] **Q** Material removal rate per minute [cm³.min⁻¹]
切屑厚度 (用于平直切削刃刀片) **Chip thickness** **(For insert with straight edge)**	$h = f_{rev} \cdot \sin \kappa_r$	[mm]	
切屑厚度 (用于圆形刀片) **Chip thickness** **(For round cutting insert)**	$h = f_{rev} \cdot \sqrt{\frac{a_p}{D}}$	[mm]	
金属去除率 **Metal removal rate**	$Q = a_p \cdot f_{rev} \cdot v_c$	[cm³/分钟] [cm³.min⁻¹]	
功率需量 **Power demand**	$P_c = \frac{a_p \cdot f_{rev}^{1-c} \cdot k_{c1} \cdot v_c \cdot \kappa_r}{6 \cdot 10^4 \cdot \eta}$	[kW]	P_c 功率需量 [kW] a_p 切削深度 [mm] f_{rev} 进给量 [mm/转] c 常数 KTV [1] k_c 单位切削力 [MPa] k_{κ_r} κ_r 角度常数 [1] η 效率 (通常 η = 0.75) [1] x 加工材料常数 [1] **P_c** Power demand [kW] **a_p** Dept of cut [mm] **f_{rev}** Feed [mm.rev⁻¹] **c** Constant KTV [1] **k_c** Specific cutting force [MPa] **k_{κ_r}** κ_r angle constant [1] **η** Efficiency ((usualy η = 0,75) [1] **x** Machined material constant [1]
近似 功率需量 **Approximate power demand**	$P_c = \frac{a_p \cdot f_{rev} \cdot v_c}{x}$	[kW]	

材料 Material	钢 Steel	铸铁 Cast iron	铝 Al
系数 x Coefficient x	20	25	100

车刀的工作角度和结构角度
WORKING AND CONSTRUCTIONAL ANGLES OF TURNING TOOL

切削刃相对工件的位置及其几何形状由功能表面和辅助平面所形成的角度确定。切削刃上的角度在两个坐标系统上确定：

a) 安装前

b) 安装后

Ad a) 刀具坐标系统 (静态)，用于在设计、生产和检查时确定切削刃槽型。在此系统内定义的所有角度都称为刀具切削角度。按照刀片形状通过 ISO 标准定义的所有角度在属于此类角度。

Ad b) 工作坐标系统，用于在加工过程中确定切削刃几何角度。这些角度叫工作角度，取决于刀片夹入刀柄的位置。如刀片 SNUN 的刀具后角 α = 0°，前角 γ = 0°，然而刀片是以一定角度夹入刀柄中，因此确定工作后角 α_o = 6°，工作前角 γ_o = - 6°。

工作角度会影响带预成型容屑结构的刀具角度。然而，最重要的是切削过程中的工作角度。

The position of cutting edge considering to workpiece and its geometrical shape are determined by angles formed by functional surface and auxiliary planes. The angles on cutting edge are determined on two coordinate systems:

a) tool

b) working

Ad a) tool coordinate system (stationary), used for determination of cutting edge geometry at design, production and check. All angles defined in this system are called tool cutting angles. All angles defined by ISO standard according to insert shape belong into this group.

Ad b) working coordinate system, used for determination of cutting edge geometry during machining process. These angles are called working angles, depend on position of insert clamped into tool holder. E.g. the tool clearance angle of cutting insert SNUN ..... α = 0°, rake angle γ = 0°, however insert is clamped in tool holder under the angle , thereby the working clearance angle α_o = 6° and working rake angle γ_o = - 6° are determined.

The working angles affect the tool angles with pre-formed chip formers. However the most important are the working angles for cutting process.

图 7

Picture No. 7

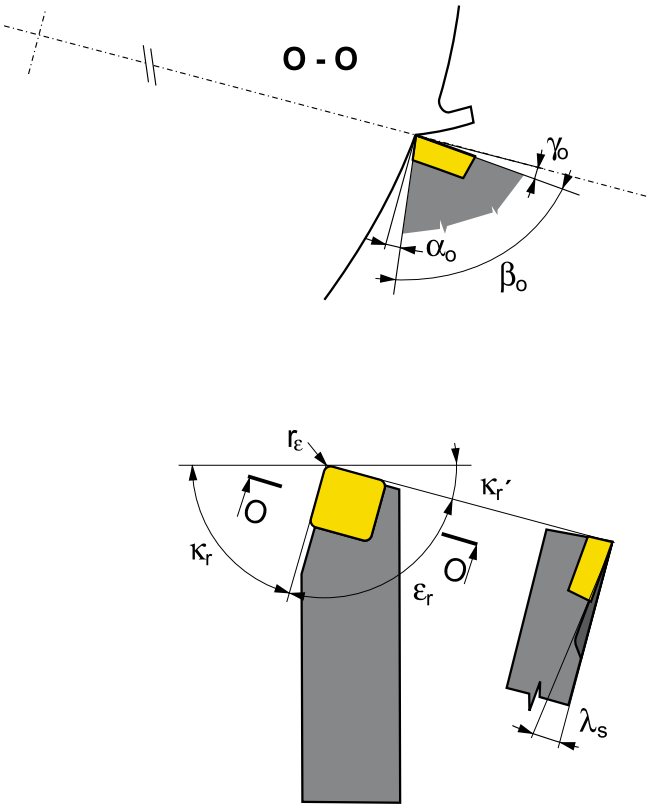

PRAMET

基本刀具角度在图中的基本刀具平面中部分指示(中间插入刀柄支承面)，部分位于名义刀具平面中 (插入至切削刃 – 切削 O-O)。

我们讨论一下角度：

前角 γ_o – 从根本上影响切削过程。切屑成形过程中塑性变形的程度和趋向取决于该角度，从而由切削力值和切削刃热应力决定。对于带有用于铣削和车削的可转位刀片的切削刀具，前角 γ_o 在 + 25° 至 -15° 之间。正前角改善切屑成形条件、减小切削力和降低切削温度。负前角提高切削刃的强度，但会增加切屑成形时的塑性变形，从而增大切削力和提高温度。

后角 α_o 影响后刀面与加工表面之间的摩擦值。后角 α_o 增大时，摩擦力会降低，因此后刀面磨损也会降低。

楔角 β_o 为刀片夹角。较大的楔角 β_o 可提高切削刃强度 (抵抗冲击)，但同时也增加了切削阻力。

主切削刃的刃倾角 λ_s – 决定切削刃与工件的第一个接触点，这对于断续切削非常重要。如果 λ_s 为正值，则接触点靠近刀尖。负刃倾角 λ_s 使第一个接触点远离刀尖，从而影响刀刃抵抗机械应力的能力。此外，λ_s 也影响排屑方向。如果 λ_s 为负值，排屑方向朝向已加工表面。而如果 λ_s 为正值，排屑方向远离已加工表面。

主切削刃的主偏角 κ_r 影响切屑横截面的形状。在角度 κ_r 较小时，对于给定的进给量 f 和切削深度 a_p，切屑较宽较薄。然而在 $\kappa_r = 90°$ 时，切屑厚度 h = f，切屑宽度 $b = a_p$。

次切削刃的主偏角 κ_r 与刀尖半径 r_ε 一起决定最终表面质量。

The basic tool angles are indicated in picture partly in basic tool plane (interlaid by bearing surface of tool holder) in part in normal tool plane (interlaid across to cutting edge – cut O-O).

We speak about following angles:

The rake angle γ_o – substantially effects the cutting process. Progress and size of plastic deformation during chip forming depends on its dimension, thereby is determined the value of cutting forces and thermal stress of cutting edge. The dimension of rake angel is in interval $\gamma_o = + 25°$ až -15° for cutting tools with indexable cutting inserts for milling and turning. Positive rake angle improves the chip forming conditions, reduces the cutting force and level of cutting temperature. Negative rake angle improves the strength of cutting edge however increases the plastic deformation at chip forming and thereby cutting forces and temperatures.

Clearance angle α_o effects the value of friction between the flank and machined surface. With growing clearance angle α_o the friction is reduced and thereby the flank wear as well.

Wedge angle β_o is included angle of cutting insert. With bigger angle β_o grows the strength of cutting edge (resistance against shock), however at the same time grows the cutting resistance.

Inclination angle of major cutting edge λ_s – determines the point of first contact of cutting edge with workpiece, this is important for interrupted cut. If the λ_s is positive, the point of contact is close to the nose of the cutting insert. The negative angle λ_s moves the point of first contact far from the nose and thereby effects on resistance of edge against mechanical stress. Besides λ_s effects the direction of chip evacuation. If λ_s is negative, the direction of chip evacuation is towards the machined surface. Whereas if λ_s is positive, the direction of chip evacuation is from the machined surface.

Setting angle of major cutting edge κ_r effect the shape of chip cross-section. With smaller angle κ_r the chip is wider and thiner at given feed **f** and depth of cut $\mathbf{a_p}$. Whereas at $\kappa_r = 90°$ the chip thickness **h = f** and the chip width $\mathbf{b = a_p}$.

Setting angle of minor cutting edge κ_r together with nose radius $\mathbf{r_\varepsilon}$ define the final surface quality.

加工方式的选择受工件和机床的影响。工件 - 外螺纹或内螺纹，右旋或左旋螺纹。机床 - 右手或左手刀柄。可以使用下面的表 18。

The choice of production method is influenced by workpiece and machine. Workpiece – external or internal thread, right or left hand thread. Machine – right or left hand tool. You can use following *table no. 18.*

表 18a

Table No. 18a

外螺纹，右旋 / EXTERNAL THREAD, RIGHT-HAND

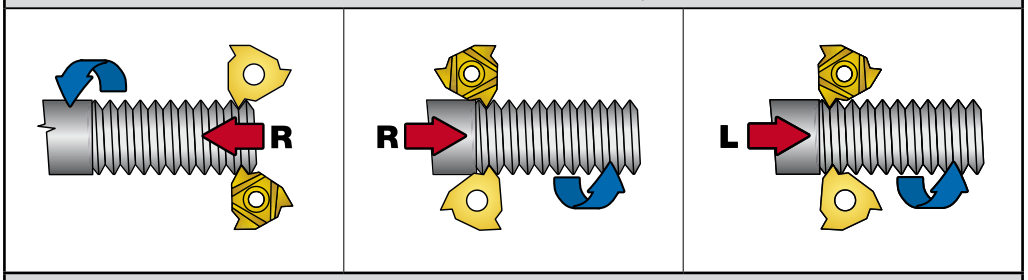

外螺纹，左旋 / EXTERNAL THREAD, LEFT-HAND

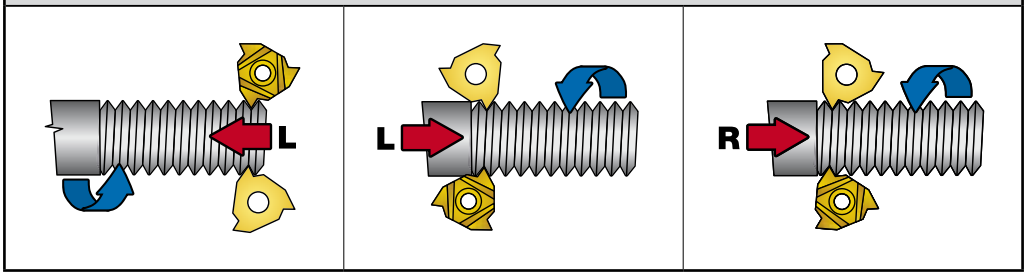

表 18b

Table No. 18b

内螺纹，右旋 / INTERNAL THREAD, RIGHT-HAND

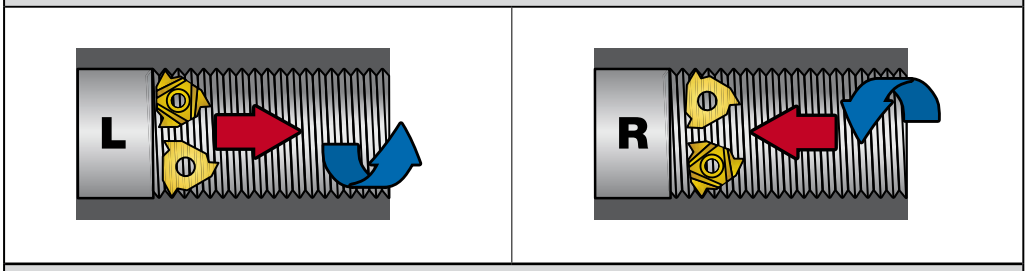

内螺纹，左旋 / INTERNAL THREAD, LEFT-HAND

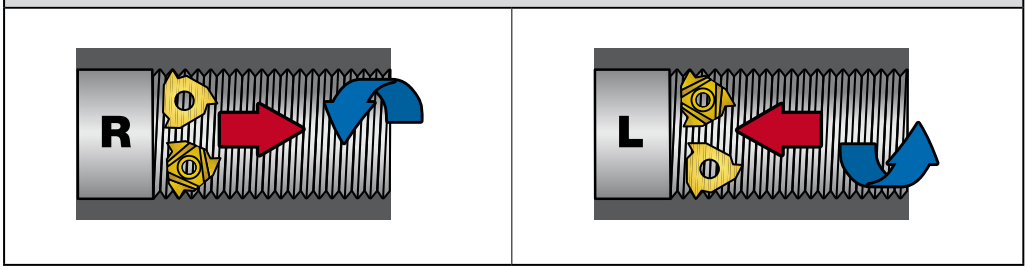

PRAMET

主偏角可以通过下面的公式来计算

Following formulae could be used for the lead angle calculation

$$tg\,\omega = \frac{p}{d_s \cdot \pi}$$

ω	螺旋角	[°]	*ω*	*helix angle*	*[°]*
p	螺距	[mm]	*p*	*pitch*	*[mm]*
d_s	螺纹中径	[mm]	d_s	*pitch diameter*	*[mm]*

图 8

Picture No. 8

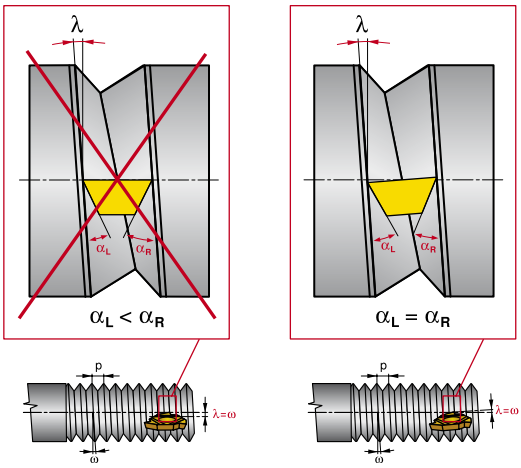

为加工出正确的螺纹牙型和确保刀片均匀磨损，切削刃螺旋角应该等于螺纹导程角。

通常，刀柄螺旋角 λ = 1.5°。可以通过更换刀垫选择不同的螺旋角。

使用下图或表选择正确的刀垫。表 19 和图 9。

To receive the correct shape on the thread and uniform wear on the insert the cutting edge helix angle should be the equal to the thread lead angle.

Usually the tool holders are supplied with helix angle λ = 1,5°. The different helix angle can be selected by changing the anvil.

Use the graph or table below to choose the correct anvil. Table *No. 19 and the graph - picture No. 9.*

表 19 - 选择刀垫

Table No. 19 - choice of shim

螺旋角 / Helix angle	正前角 / Positive					负前角 / Negative		用于开槽刀片 for recessing inserts TN16.. ... ZZ
	4.5°	3.5°	2.5°	**1.5°**	0.5°	-0.5°	-1.5°	
刀柄 / Tool holder	刀垫规格 / **Anvil specification**							
SER .... .16 SIL .... .16	PE16+4.5	PE16+3.5	PE16+2.5	PE16+1.5	PE16+0.5	PE16-0.5	PE16-1.5	PE16ZZ
SEL .... .16 SIR .... .16	PI16+4.5	PI16+3.5	PI16+2.5	PI16+1.5	PI16+0.5	PI16-0.5	PI16-1.5	PI16ZZ
SER .... .22 SIL .... .22	PE22+4.5	PE22+3.5	PE22+2.5	PE22+1.5	PE22+0.5	PE22-0.5	PE22-1.5	-
SEL .... .22 SIR .... .22	PI22+4.5	PI22+3.5	PI22+2.5	PI22+1.5	PI22+0.5	PI22-0.5	PI22-1.5	-
SER-S .... .22 SIL-S .... .22	PE22S+4.5	PE22S+3.5	PE22S+2.5	PE22S+1.5	PE22S+0.5	PE22S-0.5	PE22S-1.5	-
SEL-S .... .22 SIR-S .... .22	PI22S+4.5	PI22S+3.5	PI22S+2.5	PI22S+1.5	PI22S+0.5	PI22S-0.5	PI22S-1.5	-

注意：通常，刀柄螺旋角 λ = 1.5°。可以通过更换刀垫选择不同的螺旋角。
用于刀柄 SER-S ....、SIR-S .... 的刀垫标有 “S”

Note: Usually the tool holders are supplied with helix angle λ = 1,5°. The different helix angle can be selected by changing the anvil.
Shims for holders SER-S ...., SIR-S .... are marked with „S“

图 9 - 刀垫选择

Picture No. 9 - Graph for shim selection

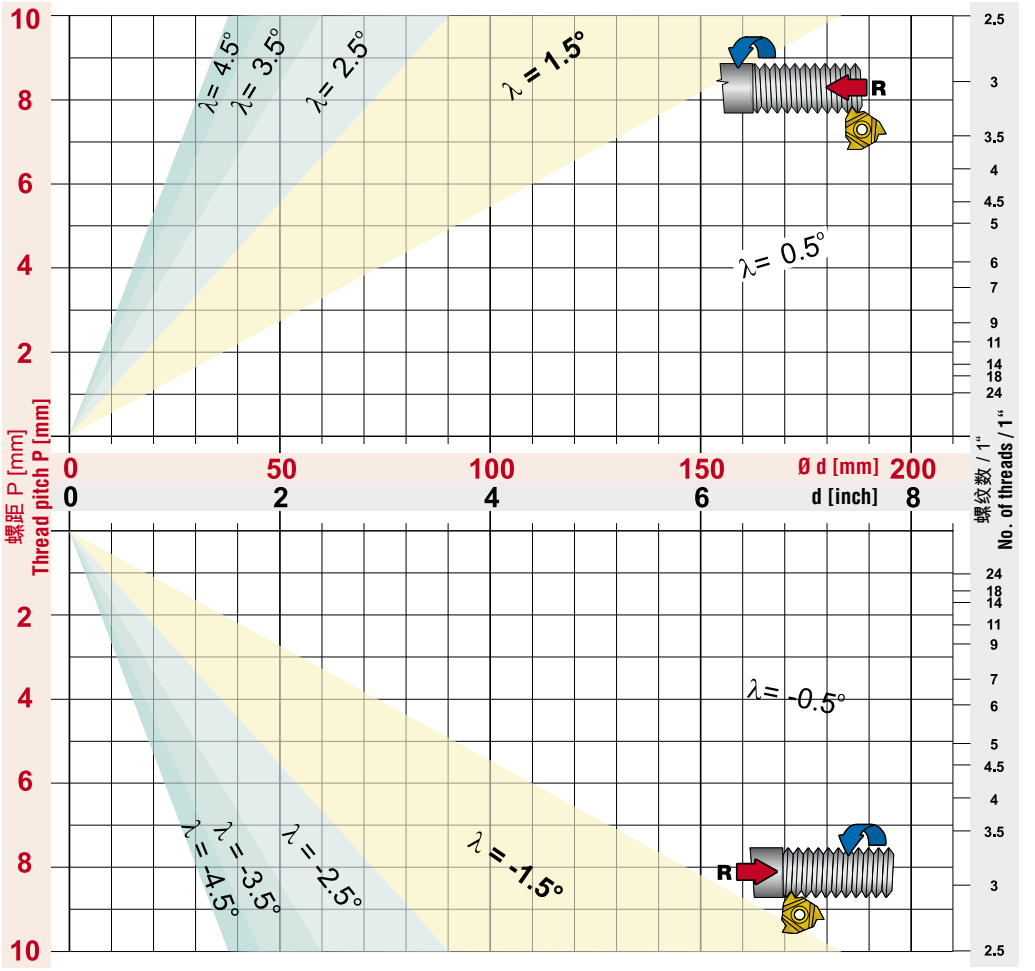

PRAMET

进刀方式和深度

为保证良好的切屑控制，进刀方式的选择对于长切屑材料来说是最重要的。

Infeed method and depth

The choice of infeed method is most important for long chipping materials to ensure good chip control.

图 10

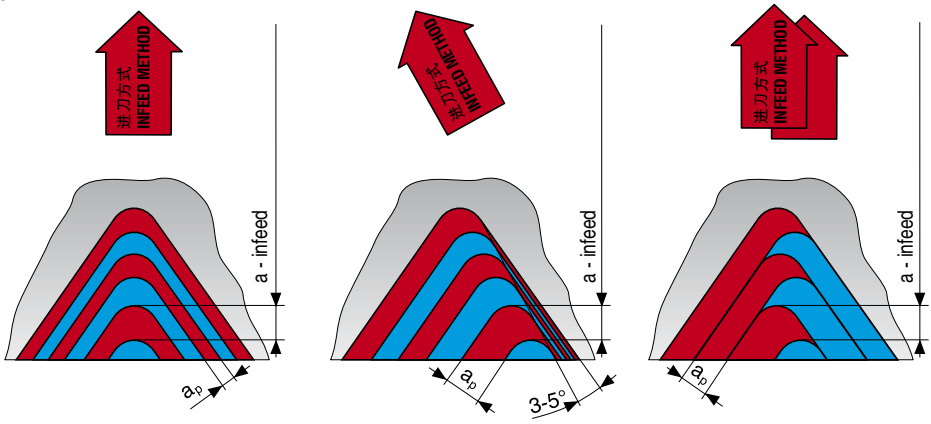

径向
RADIAL

侧向
FLANK

交替式侧向进刀
ALTERNATE FLANK INFEED

该选择取决于机床类型、待加工材料和螺距。

径向进刀 – 简单，最常用。进给与工件旋转轴垂直。良好的切屑成形，均匀的切削刃磨损。适用于小螺距螺纹 (p < 1.5 mm) 加工。较高进给存在振动危险。首选用于加工淬火材料（例如，奥氏体不锈钢、低碳钢)。

侧向进刀 – 减少切削刃热应力，从而减小磨损。良好的切屑控制。适用于车削螺距 p >1.5 mm 的螺纹。偏差为 3-5° 的侧向进刀可消除螺纹牙侧的摩擦。

交替式侧向进刀 – 推荐用于大螺距和切屑成形不佳的材料。刀具寿命长。用于 CNC 机床，对于 CNC 编程有更高要求。

进刀方式和走刀次数取决于螺距。表格中给出的是基本推荐值并能应用于所有的槽型。如果发生刀片崩刃，应该增加步数。进刀深度应该不低于 0.05 mm/步。在奥氏体和软钢件上，每次走刀的进刀深度应该大于 0.08 mm。

The choice depends on machine type, machined material and pitch.

Radial infeed – simple, mostly used. Infeed is perpendicular to axis of rotation of workpiece. Good chip forming, uniform wear of cutting edge. Suitable for threads with small pitch (p <1,5 mm). The risk of vibration at higher feeds. First choice for work hardening materials (e.g. austenitic stainless steels, steels with low content of carbon).

Flank infeed – reduces thermal stress of cutting edge and thereby the wear. Good chip control. Suitable for threads with pitch p >1,5 mm for TR threads. Flank infeed with deviation 3-5° eliminates the friction on the thread flank.

Alternate flank infeed – recommended for big pitch and materials with bad chip formation. Long tool life. For CNC machines, higher demand on CNC programming.

Infeed method and number of passes depend on thread pitch. The tables give basic recommendations and are applicable on all geometries. If insert fracture should occur, the number of passes should be increased. The infeed depth should not be less than 0,05 mm/pass. On austenitic and soft steels the infeed depth per pass should be greater than 0,08 mm.

表 20a：M - 公制 60° - 外螺纹 / *Tab. No. 20a: M - metric 60° - external*

走刀次数 Number of passes	随着螺距增大成比例降低切削速度 REDUCE THE CUTTING SPEED PROPORTIONALLY WITH GROWING THREAD PITCH														
	螺距 [mm] / **Pitch [mm]**														
	6.0	5.5	5.0	4.5	4.0	3.5	3.0	2.5	2.0	1.75	1.5	1.25	1.0	0.75	0.50
1	0.46	0.43	0.41	0.37	0.34	0.34	0.28	0.27	0.24	0.22	0.22	0.21	0.18	0.16	0.11
2	0.43	0.40	0.39	0.34	0.32	0.31	0.26	0.24	0.22	0.20	0.20	0.17	0.16	0.14	0.09
3	0.35	0.32	0.32	0.28	0.25	0.25	0.21	0.20	0.18	0.17	0.17	0.14	0.12	0.11	0.07
4	0.30	0.28	0.27	0.24	0.22	0.21	0.18	0.17	0.16	0.14	0.14	0.11	0.11	0.07	0.06
5	0.29	0.26	0.24	0.22	0.20	0.18	0.16	0.15	0.14	0.12	0.12	0.10	0.08		
6	0.26	0.24	0.24	0.22	0.18	0.18	0.15	0.15	0.12	0.10	0.08	0.08			
7	0.24	0.21	0.22	0.20	0.17	0.16	0.14	0.12	0.11	0.10					
8	0.23	0.20	0.20	0.18	0.15	0.15	0.13	0.11	0.08	0.08					
9	0.22	0.19	0.19	0.17	0.14	0.14	0.12	0.11							
10	0.19	0.18	0.18	0.16	0.13	0.12	0.11	0.08							
11	0.18	0.17	0.16	0.14	0.12	0.11	0.10								
12	0.16	0.15	0.15	0.13	0.12	0.08	0.08								
13	0.15	0.14	0.12	0.12	0.11										
14	0.13	0.13	0.10	0.10	0.08										
15	0.13	0.12													
16	0.10	0.10													
总进刀深度 Total infeed depth [mm]	3.83	3.52	3.19	2.87	2.53	2.23	1.92	1.60	1.25	1.13	0.93	0.81	0.65	0.48	0.33

表 20b：M - 公制 60° - 内螺纹 / *Tab. No. 20b: M - Métrica 60° - internal*

走刀次数 Number of passes	随着螺距增大成比例降低切削速度 REDUCE THE CUTTING SPEED PROPORTIONALLY WITH GROWING THREAD PITCH														
	螺距 [mm] / **Pitch [mm]**														
	6.0	5.5	5.0	4.5	4.0	3.5	3.0	2.5	2.0	1.75	1.5	1.25	1.0	0.75	0.50
1	0.46	0.43	0.42	0.37	0.34	0.32	0.28	0.26	0.23	0.22	0.20	0.17	0.17	0.16	0.10
2	0.43	0.40	0.40	0.34	0.31	0.30	0.26	0.25	0.21	0.20	0.18	0.17	0.15	0.13	0.08
3	0.35	0.33	0.32	0.28	0.24	0.24	0.21	0.18	0.17	0.15	0.15	0.14	0.11	0.10	0.07
4	0.30	0.26	0.26	0.23	0.21	0.19	0.16	0.15	0.15	0.13	0.13	0.10	0.09	0.07	0.06
5	0.26	0.22	0.22	0.21	0.18	0.17	0.14	0.13	0.12	0.10	0.11	0.09	0.08		
6	0.22	0.20	0.20	0.19	0.15	0.15	0.13	0.12	0.11	0.09	0.08	0.08			
7	0.20	0.18	0.17	0.16	0.14	0.14	0.12	0.11	0.10	0.08					
8	0.19	0.17	0.16	0.15	0.13	0.13	0.11	0.10	0.08	0.08					
9	0.18	0.16	0.16	0.14	0.12	0.12	0.10	0.10							
10	0.16	0.15	0.15	0.13	0.12	0.11	0.10	0.08							
11	0.15	0.14	0.14	0.12	0.11	0.10	0.09								
12	0.15	0.14	0.14	0.12	0.10	0.08	0.08								
13	0.14	0.13	0.12	0.11	0.10										
14	0.13	0.12	0.10	0.10	0.08										
15	0.12	0.12													
16	0.10	0.10													
总进刀深度 Total infeed depth [mm]	3.54	3.25	2.96	2.65	2.33	2.05	1.78	1.48	1.17	1.05	0.85	0.75	0.60	0.46	0.31

表 21：W - 惠氏标准螺纹 55° - 外螺纹 / *Tab. No. 21: W - Whitworth 55° - external*

走刀次数 Number of passes	随着螺距增大成比例降低切削速度 REDUCE THE CUTTING SPEED PROPORTIONALLY WITH GROWING THREAD PITCH																
	螺距 [每英寸螺纹数] / **Pitch [no** of thread/inch]																
	4	4.5	5	6	7	8	9	10	11	12	14	16	18	19	20	26	28
1	0.49	0.46	0.45	0.38	0.37	0.32	0.30	0.29	0.28	0.28	0.24	0.24	0.23	0.22	0.21	0.19	0.18
2	0.46	0.43	0.43	0.36	0.35	0.30	0.28	0.27	0.26	0.26	0.22	0.22	0.22	0.22	0.21	0.18	0.17
3	0.38	0.38	0.38	0.30	0.29	0.24	0.23	0.22	0.22	0.22	0.18	0.19	0.19	0.18	0.17	0.15	0.14
4	0.36	0.33	0.32	0.26	0.25	0.21	0.20	0.19	0.19	0.18	0.15	0.16	0.16	0.14	0.14	0.12	0.12
5	0.34	0.29	0.28	0.22	0.22	0.19	0.18	0.17	0.16	0.16	0.13	0.13	0.13	0.12	0.11	0.08	0.08
6	0.31	0.25	0.25	0.21	0.19	0.17	0.15	0.15	0.14	0.14	0.11	0.11	0.08	0.08	0.08		
7	0.29	0.24	0.22	0.19	0.18	0.15	0.14	0.14	0.13	0.13	0.09	0.08					
8	0.27	0.22	0.20	0.17	0.16	0.14	0.13	0.13	0.12	0.08	0.08						
9	0.24	0.20	0.19	0.16	0.15	0.13	0.12	0.12	0.08								
10	0.22	0.18	0.18	0.15	0.14	0.12	0.12	0.08									
11	0.20	0.17	0.17	0.14	0.12	0.12	0.08										
12	0.19	0.16	0.15	0.14	0.08	0.08											
13	0.17	0.15	0.12	0.12													
14	0.15	0.14	0.10	0.10													
15	0.12	0.12															
16	0.10	0.10															
总进刀深度 Total infeed depth [mm]	4.29	3.82	3.44	2.90	2.50	2.17	1.93	1.76	1.58	1.45	1.20	1.13	1.01	0.96	0.92	0.72	0.69

表 22a：UN - UN 60° - 外螺纹 / *Tab. No. 22a: UN - UN 60° - external*

走刀次数 Number of passes	随着螺距增大成比例降低切削速度 REDUCE THE CUTTING SPEED PROPORTIONALLY WITH GROWING THREAD PITCH																	
	螺距 [每英寸螺纹数] / **Pitch [no** of thread/inch]																	
	4	4.5	5	6	7	8	9	10	11	12	13	14	16	18	20	24	28	32
1	0.47	0.45	0.43	0.36	0.35	0.30	0.28	0.27	0.27	0.27	0.25	0.23	0.22	0.23	0.20	0.19	0.17	0.17
2	0.44	0.41	0.40	0.34	0.33	0.28	0.26	0.26	0.25	0.26	0.24	0.22	0.21	0.21	0.19	0.17	0.15	0.15
3	0.40	0.39	0.36	0.27	0.26	0.25	0.21	0.20	0.20	0.20	0.18	0.17	0.16	0.16	0.15	0.14	0.11	0.13
4	0.36	0.31	0.31	0.23	0.22	0.21	0.20	0.17	0.19	0.18	0.17	0.15	0.14	0.14	0.12	0.12	0.09	0.08
5	0.32	0.26	0.26	0.22	0.21	0.18	0.17	0.16	0.16	0.15	0.14	0.13	0.13	0.12	0.10	0.08	0.08	
6	0.27	0.23	0.23	0.20	0.19	0.16	0.15	0.15	0.14	0.13	0.12	0.11	0.11	0.08	0.08			
7	0.25	0.21	0.20	0.18	0.17	0.14	0.14	0.14	0.12	0.12	0.11	0.10	0.08					
8	0.23	0.20	0.19	0.16	0.15	0.13	0.12	0.12	0.11	0.08	0.08	0.08						
9	0.22	0.18	0.19	0.15	0.14	0.12	0.12	0.11	0.08									
10	0.21	0.17	0.18	0.14	0.12	0.12	0.11	0.08										
11	0.19	0.16	0.17	0.13	0.11	0.11	0.08											
12	0.18	0.15	0.15	0.12	0.08	0.08												
13	0.16	0.14	0.12	0.11														
14	0.15	0.14	0.10	0.10														
15	0.12	0.12																
16	0.10	0.10																
总进刀深度 Total infeed depth [mm]	4.07	3.62	3.29	2.71	2.33	2.08	1.84	1.66	1.52	1.39	1.29	1.19	1.05	0.94	0.84	0.70	0.60	0.53

表 22b：UN - UN 60° - 内螺纹 / *Tab. No. 22b: UN - UN 60° - internal*

走刀次数 Number of passes	随着螺距增大成比例降低切削速度 REDUCE THE CUTTING SPEED PROPORTIONALLY WITH GROWING THREAD PITCH																	
	螺距 [每英寸螺纹数] / **Pitch [no** of thread/inch]																	
	4	4.5	5	6	7	8	9	10	11	12	13	14	16	18	20	24	28	32
1	0.44	0.41	0.42	0.35	0.34	0.30	0.28	0.27	0.27	0.27	0.25	0.23	0.22	0.23	0.20	0.18	0.17	0.17
2	0.41	0.38	0.38	0.33	0.32	0.28	0.26	0.25	0.23	0.23	0.20	0.18	0.18	0.17	0.16	0.15	0.14	0.14
3	0.39	0.34	0.33	0.25	0.24	0.22	0.19	0.18	0.18	0.18	0.15	0.14	0.14	0.14	0.13	0.13	0.09	0.10
4	0.33	0.28	0.27	0.21	0.21	0.18	0.16	0.15	0.15	0.15	0.13	0.13	0.12	0.12	0.10	0.10	0.08	0.08
5	0.28	0.23	0.23	0.18	0.17	0.15	0.14	0.13	0.13	0.13	0.12	0.11	0.10	0.10	0.09	0.08	0.08	
6	0.24	0.20	0.20	0.16	0.15	0.13	0.13	0.12	0.11	0.11	0.11	0.10	0.09	0.08	0.08			
7	0.22	0.19	0.18	0.15	0.14	0.12	0.12	0.11	0.11	0.10	0.10	0.09	0.08					
8	0.21	0.18	0.17	0.14	0.13	0.11	0.11	0.10	0.10	0.08	0.08	0.08						
9	0.20	0.17	0.16	0.13	0.12	0.11	0.10	0.10	0.08									
10	0.18	0.16	0.15	0.12	0.12	0.10	0.09	0.08										
11	0.17	0.15	0.14	0.12	0.11	0.10	0.08											
12	0.16	0.14	0.14	0.11	0.08	0.08												
13	0.15	0.14	0.12	0.11														
14	0.14	0.13	0.10	0.10														
15	0.12	0.12																
16	0.10	0.10																
总进刀深度 Total infeed depth [mm]	3.74	3.32	2.99	2.46	2.13	1.88	1.66	1.49	1.36	1.25	1.14	1.06	0.93	0.84	0.76	0.64	0.56	0.49

表 23：NPT - NPT 60° - 内螺纹和外螺纹 / *Tab. No. 23: NPT - NPT 60° - internal and external*

走刀次数 Number of passes	随着螺距增大成比例降低切削速度 REDUCE THE CUTTING SPEED PROPORTIONALLY WITH GROWING THREAD PITCH				
	螺距 [每英寸螺纹数] / **Pitch [no** of thread/inch]				
	8	11.5	14	18	27
1	0.28	0.25	0.24	0.22	0.19
2	0.25	0.22	0.22	0.18	0.15
3	0.22	0.18	0.17	0.15	0.13
4	0.19	0.16	0.15	0.14	0.11
5	0.18	0.16	0.14	0.13	0.09
6	0.18	0.14	0.13	0.12	0.08
7	0.17	0.14	0.12	0.10	
8	0.17	0.12	0.10	0.08	
9	0.16	0.12	0.10		
10	0.16	0.10	0.08		
11	0.14	0.09			
12	0.13	0.08			
13	0.12				
14	0.11				
15	0.08				
总进刀深度 Total infeed depth [mm]	2.54	1.76	1.45	1.12	0.75

表 24a：RD - RD 30° - 外螺纹 / *Tab. No. 24a: RD - RD 30° - external*

走刀次数 Number of passes	随着螺距增大成比例降低切削速度 REDUCE THE CUTTING SPEED PROPORTIONALLY WITH GROWING THREAD PITCH			
	螺距 [每英寸螺纹数] / **Pitch [no** of thread/inch]			
	4	6	8	10
1	0.44	0.33	0.29	0.26
2	0.40	0.29	0.26	0.25
3	0.34	0.25	0.21	0.23
4	0.32	0.23	0.19	0.20
5	0.28	0.20	0.18	0.16
6	0.26	0.18	0.16	0.12
7	0.24	0.16	0.14	0.10
8	0.22	0.15	0.12	0.08
9	0.20	0.14	0.10	
10	0.19	0.12	0.08	
11	0.17	0.10		
12	0.15	0.08		
13	0.12			
14	0.10			
总进刀深度 Total infeed depth [mm]	3.43	2.23	1.73	1.40

表 24b：RD - RD 30° - 内螺纹 / *Tab. No. 24b : RD - RD 30° - internal*

走刀次数 Number of passes	随着螺距增大成比例降低切削速度 REDUCE THE CUTTING SPEED PROPORTIONALLY WITH GROWING THREAD PITCH			
	螺距 [每英寸螺纹数] / **Pitch [no** of thread/inch]			
	4	6	8	10
1	0.46	0.38	0.26	0.27
2	0.43	0.34	0.22	0.26
3	0.40	0.30	0.21	0.25
4	0.35	0.25	0.19	0.22
5	0.30	0.21	0.18	0.18
6	0.26	0.19	0.16	0.13
7	0.24	0.17	0.14	0.10
8	0.22	0.16	0.12	0.08
9	0.20	0.14	0.10	
10	0.19	0.12	0.08	
11	0.17	0.10		
12	0.15	0.08		
13	0.12			
14	0.10			
总进刀深度 Total infeed depth [mm]	3.59	2.44	1.66	1.49

表 25a：TR - TR 30° - 外螺纹 / *Tab. No. 25a: TR - TR 30° - external*

走刀次数 Number of passes	随着螺距增大成比例降低切削速度 REDUCE THE CUTTING SPEED PROPORTIONALLY WITH GROWING THREAD PITCH											
	螺距 [mm] / **Pitch [mm]**											
	14.0	12.0	10.0	9.0	8.0	7.0	6.0	5.0	4.0	3.0	2.0	1.5
1	0.40	0.38	0.38	0.38	0.37	0.37	0.37	0.34	0.31	0.27	0.25	0.23
2	0.37	0.36	0.36	0.35	0.35	0.34	0.35	0.33	0.28	0.25	0.24	0.22
3	0.36	0.34	0.34	0.34	0.34	0.33	0.32	0.27	0.24	0.21	0.20	0.18
4	0.36	0.34	0.34	0.33	0.33	0.31	0.29	0.25	0.20	0.17	0.17	0.14
5	0.35	0.32	0.32	0.31	0.31	0.29	0.27	0.23	0.19	0.15	0.14	0.12
6	0.35	0.32	0.32	0.30	0.29	0.26	0.25	0.21	0.18	0.13	0.13	0.08
7	0.34	0.30	0.31	0.29	0.28	0.26	0.23	0.20	0.16	0.13	0.11	
8	0.34	0.30	0.29	0.28	0.27	0.26	0.22	0.20	0.15	0.12	0.09	
9	0.34	0.30	0.28	0.26	0.25	0.24	0.22	0.18	0.15	0.12		
10	0.33	0.29	0.27	0.25	0.24	0.23	0.20	0.16	0.15	0.10		
11	0.33	0.29	0.25	0.24	0.23	0.22	0.18	0.15	0.14	0.10		
12	0.32	0.29	0.24	0.23	0.21	0.22	0.17	0.14	0.13	0.08		
13	0.32	0.28	0.23	0.22	0.20	0.20	0.17	0.13	0.10			
14	0.31	0.27	0.22	0.21	0.19	0.19	0.16	0.10				
15	0.31	0.25	0.22	0.21	0.19	0.17	0.14					
16	0.30	0.25	0.20	0.19	0.18	0.16	0.12					
17	0.30	0.24	0.19	0.18	0.17	0.12						
18	0.29	0.22	0.18	0.16	0.15							
19	0.28	0.20	0.17	0.15	0.13							
20	0.27	0.20	0.16	0.15								
21	0.23	0.19	0.15	0.13								
22	0.23	0.18	0.15									
23	0.21	0.17	0.13									
24	0.19	0.16										
25	0.17	0.15										
26	0.16	0.13										
27	0.16											
28	0.15											
29	0.13											
总进刀深度 Total infeed depth [mm]	8.2	6.72	5.7	5.16	4.68	4.17	3.66	2.89	2.38	1.83	1.33	0.97

表 25b：TR - TR 30° - 内螺纹 / *Tab. No. 25b: TR - TR 30° - internal*

走刀次数 Number of passes	随着螺距增大成比例降低切削速度 REDUCE THE CUTTING SPEED PROPORTIONALLY WITH GROWING THREAD PITCH											
	螺距 [mm] / **Pitch [mm]**											
	14.0	12.0	10.0	9.0	8.0	7.0	6.0	5.0	4.0	3.0	2.0	1.5
1	0.40	0.38	0.38	0.38	0.37	0.37	0.37	0.34	0.31	0.27	0.25	0.23
2	0.37	0.36	0.36	0.35	0.35	0.34	0.34	0.33	0.28	0.25	0.24	0.22
3	0.36	0.34	0.34	0.34	0.34	0.33	0.32	0.27	0.24	0.22	0.21	0.19
4	0.36	0.34	0.34	0.33	0.33	0.31	0.29	0.25	0.20	0.17	0.17	0.14
5	0.35	0.32	0.32	0.31	0.31	0.29	0.27	0.23	0.19	0.15	0.14	0.12
6	0.35	0.32	0.32	0.31	0.29	0.26	0.25	0.21	0.18	0.14	0.13	0.08
7	0.34	0.30	0.31	0.29	0.28	0.26	0.23	0.20	0.16	0.13	0.11	
8	0.34	0.30	0.29	0.29	0.27	0.26	0.22	0.20	0.15	0.12	0.09	
9	0.34	0.30	0.28	0.26	0.25	0.24	0.22	0.18	0.15	0.12		
10	0.33	0.29	0.27	0.25	0.24	0.23	0.20	0.16	0.15	0.10		
11	0.33	0.29	0.25	0.24	0.23	0.22	0.18	0.15	0.14	0.10		
12	0.32	0.28	0.24	0.23	0.21	0.22	0.17	0.14	0.13	0.08		
13	0.32	0.28	0.23	0.22	0.20	0.20	0.17	0.13	0.10			
14	0.31	0.27	0.22	0.21	0.19	0.19	0.16	0.10				
15	0.31	0.25	0.22	0.21	0.19	0.17	0.14					
16	0.30	0.25	0.20	0.20	0.18	0.16	0.12					
17	0.30	0.24	0.19	0.18	0.17	0.12						
18	0.29	0.22	0.18	0.16	0.15							
19	0.28	0.20	0.17	0.15	0.13							
20	0.27	0.20	0.16	0.15								
21	0.27	0.19	0.15	0.13								
22	0.23	0.18	0.15									
23	0.23	0.17	0.13									
24	0.21	0.16										
25	0.19	0.15										
26	0.17	0.13										
27	0.16											
28	0.16											
29	0.15											
30	0.13											
总进刀深度 Total infeed depth [mm]	8.47	6.71	5.7	5.19	4.68	4.17	3.65	2.89	2.38	1.85	1.34	0.98

表 26a：ACME - ACME 29° - 外螺纹 / *Tab. No. 26a: ACME - ACME 29° - external*

走刀次数 Number of passes	随着螺距增大成比例降低切削速度 REDUCE THE CUTTING SPEED PROPORTIONALLY WITH GROWING THREAD PITCH							
	螺距 [每英寸螺纹数] / **Pitch [no** of thread/inch]							
	4	5	6	8	10	12	14	16
1	0.37	0.34	0.32	0.29	0.27	0.25	0.22	0.23
2	0.34	0.32	0.28	0.25	0.23	0.22	0.20	0.21
3	0.30	0.25	0.23	0.21	0.20	0.17	0.18	0.18
4	0.27	0.23	0.21	0.17	0.18	0.14	0.15	0.14
5	0.25	0.22	0.18	0.15	0.14	0.13	0.13	0.12
6	0.24	0.20	0.18	0.13	0.12	0.12	0.11	0.08
7	0.21	0.19	0.16	0.13	0.12	0.10	0.08	
8	0.20	0.19	0.16	0.12	0.11	0.09		
9	0.20	0.18	0.16	0.12	0.11			
10	0.18	0.16	0.15	0.11	0.09			
11	0.17	0.15	0.14	0.11				
12	0.16	0.14	0.13	0.09				
13	0.16	0.13	0.11					
14	0.15	0.11						
15	0.14							
16	0.12							
总进刀深度 Total infeed depth [mm]	3.46	2.83	2.41	1.88	1.57	1.22	1.07	0.96

表 26b：ACME - ACME 29° - 内螺纹 / *Tab. No. 26b: ACME - ACME 29° - internal*

走刀次数 Number of passes	随着螺距增大成比例降低切削速度 REDUCE THE CUTTING SPEED PROPORTIONALLY WITH GROWING THREAD PITCH							
	螺距 [每英寸螺纹数] / **Pitch [no** of thread/inch]							
	4	5	6	8	10	12	14	16
1	0.37	0.34	0.32	0.29	0.27	0.25	0.22	0.23
2	0.33	0.31	0.27	0.25	0.23	0.22	0.20	0.21
3	0.30	0.25	0.23	0.21	0.20	0.17	0.18	0.17
4	0.27	0.23	0.20	0.17	0.18	0.15	0.15	0.14
5	0.25	0.22	0.18	0.15	0.15	0.13	0.13	0.12
6	0.23	0.20	0.18	0.14	0.12	0.12	0.11	0.08
7	0.21	0.19	0.16	0.13	0.12	0.10	0.08	
8	0.20	0.19	0.15	0.12	0.11	0.09		
9	0.20	0.17	0.15	0.12	0.11			
10	0.18	0.16	0.15	0.12	0.09			
11	0.17	0.15	0.14	0.11				
12	0.16	0.14	0.13	0.09				
13	0.16	0.13	0.11					
14	0.15	0.11						
15	0.14							
16	0.12							
总进刀深度 Total infeed depth [mm]	3.44	2.78	2.38	1.90	1.59	1.23	1.07	0.95

车槽、切断和仿形车削。

Pramet 刀具产品系列能够实现径向和轴向 (前端) 浅槽和深槽的高效车削。对于圆环形的凹槽，能够通过滑行进给实现跟随运动 (常为仿形车削)。

使用 Pramet 开槽和切断刀具进行加工的各种技术可行方案如图 11 所示。

Turning of recesses, cutting off and copy turning.

Product line of Pramet Tools allows productive turning of shallow and deep recesses, radial and axial (front). Further recesses of circular profile with the possibility of following moving with sliding feed (generally copy turning).

Technological possibilities of recessing and cutting off tools Pramet are schematically indicated on next *picture no 11*.

图 11 / *Picture No.11*

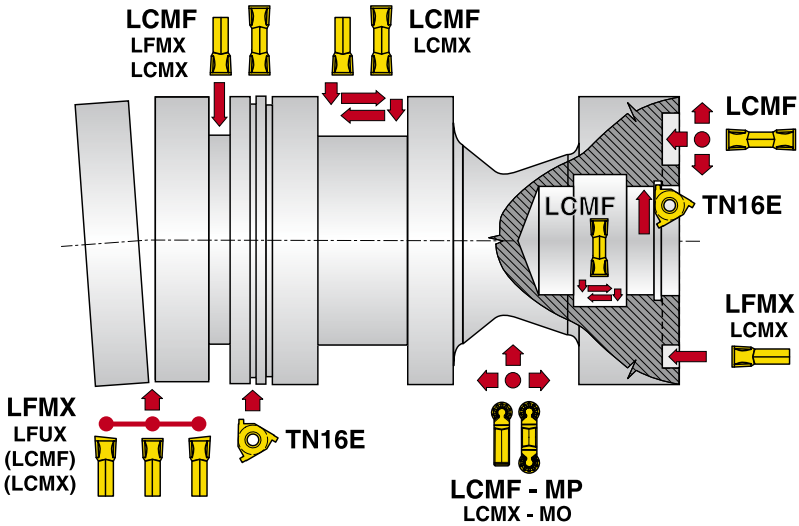

实际使用推荐：

凹槽车削工艺 (加深和加宽) 如下面图 12 所示。

Recommendation for practical usage:

Procedure at turning (deepening and widening) of recess is schematically indicated on next *picture no 12*.

图 12 / *Picture No.12*

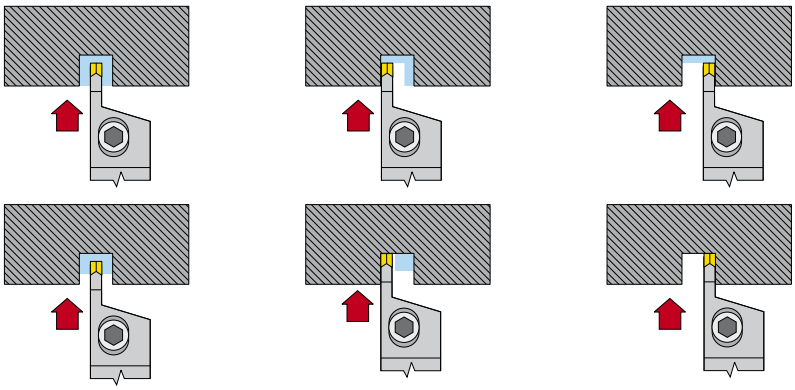

注意：使用 带断屑槽 F 的刀片 LCMF 可以实现平入位表面。允许刀片宽度重叠量为圆角半径的两倍。

*Note: you achieve flat seating surface by using of the cutting inserts LCMF with **chip breaker F**. Allowance of overlap of width of insert -2 times corner radius .*

车槽、切断和仿形车削
TURNING OF RECESSES, CUTTING OFF AND COPY TURNING

如果加工宽凹槽，遵循下面图 13 中所示的程序。

In case you machine counter (wide recess) follow the procedure schematically indicated on next *picture 13*.

图 13 / *Picture No.13*

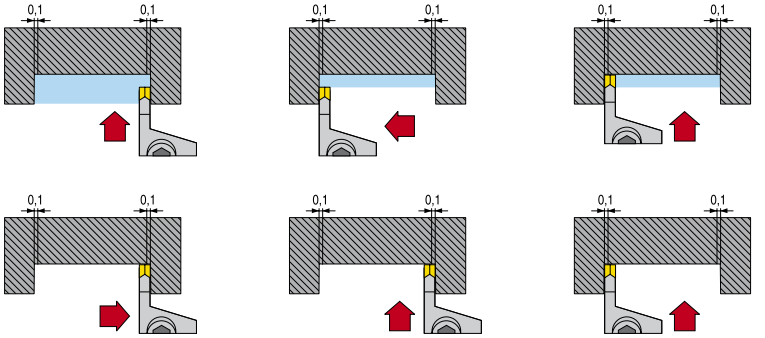

注意：使用带有断屑槽 M 的刀片 LCMF。必须考虑刀具的变形“y”

Note: Use the cutting inserts LCMF with chip breaker M. You must consider the tool's deformation "y"

- 对于 f =0.15 mm/转， a_p = 3 mm y = 0.07 mm
- 对于 f =0.25 mm/转， a_p = 3 mm y = 0.08 mm
- 对于 f =0.35 mm/转， a_p = 3 mm y = 0.10 mm

- *for f =0,15 mm.rev⁻¹; a_p = 3 mm* ***y = 0,07 mm***
- *for f =0,25 mm.rev⁻¹; a_p = 3 mm* ***y = 0,08 mm***
- *for f =0,35 mm.rev⁻¹; a_p = 3 mm* ***y = 0,10 mm***

在加宽和加深凹槽或对圆形过渡部分进行仿形车削时，使用下面图 14 中所示的程序。

At widening of counter and deepening or slide turning with round transitions use the procedure indicated on next *picture No. 14*

图 14 / *Picture No.14*

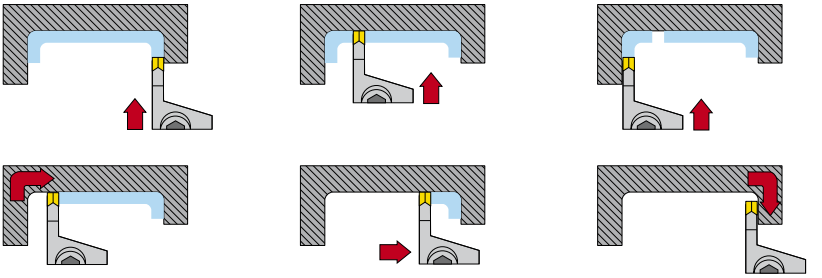

凹槽的粗加工 (带圆形切削刃的刀片) / **Roughing of counter (insert with round cutting edge)**

图 15 / *Picture No.15*

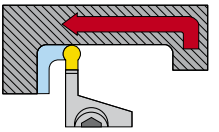

Picture No.15

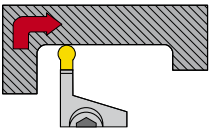

凹槽的精加工 (带圆形切削刃的刀片) / **Finishing of counter (insert with round cutting edge)**

图 16 / *Picture No.16*

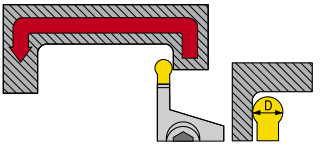

Picture No.16

D [mm]	a_p [mm]
3	0.15
4	0.20
5	0.22
6	0.25

PRAMET

- 在使用带圆形切削刃的可转位刀片进行仿形车削时，最大切深为刀片直径的 40%。
- 选择具有最大横截面和最小刀具悬伸的刀柄，以消除振动。
- 刀片的纵轴必须垂直于工件的旋转轴（在径向凹槽处）。
- 刀片的切削刃必须与工件的旋转轴处于同一高度，公差 ± 0.1 mm。
- 切削冷却液必须以足够的量直接冲向切削刃，以便有效冷却切削刃及切削刃下方的刀柄部分。
- 在车削前部凹槽时，需要根据所需的凹槽直径范围选择正确的刀柄。刀片的纵轴必须平行于工件的旋转轴，否则会增加刀具与凹槽壁摩擦过大的风险。

  如果后刀面粘在凹槽的外壁上，如图 17 中例 A，则必须将切削刃移动到工件轴上方。如果后刀面粘在凹槽的内壁上，如图 17 中例 B，则必须将切削刃移动到工件轴下方。

- **At copy turning by indexable cutting inserts with round cutting edge is the maximum depth of cut 40% of diameter of cutting insert**
- **Choose the tool holder with maximum cross-section and minimum tool overhang to eliminate vibrations.**
- **Longitudinal axis of cutting insert must be perpendicular to axis of rotation of workpiece (at radial recesses).**
- **Cutting edge of the cutting inserts must be in the level of axis of rotation of workpiece in tolerance ± 0,1 mm**
- **Cutting coolant must be led directly to cutting edge in sufficient volume, to cool the cutting edge effectively, and to part of tool holder under the cutting edge as well.**
- At turning of front recess is necessary to choose the right tool holder for the needed range of diameters of recess. Longitudinal axis of cutting insert must be parallel with axis of rotation of workpiece. Otherwise the risk of excessive friction of the tool against the walls of recess arises.

  In case the flank sticking on outer wall of recess occures, example A on picture 17, you have to move the cutting edge above the axis of workpiece. In case the flank sticking on internal wall of recess occures, example, picture 17, you have to move the cutting edge below the axis of workpiece.

在前部切槽时，刀具必须在轴线上，否则刀具会摩擦工件。

At the front recessing must be the tool in the axis, otherwise the tool chafes against the workpiece.

图 17 / *Picture No.17*

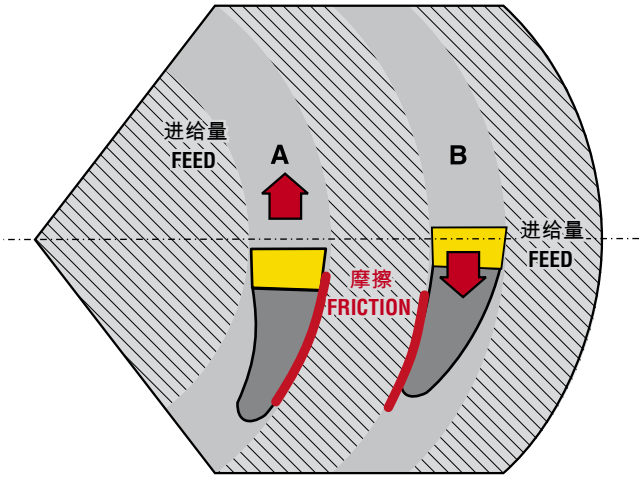

有效使用切削冷却液非常重要，要以足够的量直接对准切削刃进行冷却。冷却液必须能降低切削刃、刀柄的支撑部分及刀片座的温度。

Very important is usage of effective cutting coolant, led directly to cutting edge in sufficient volume. Cooling must reduce the temperature of cutting edge and the underlayed part of tool holder with the seating for cutting insert as well.

细长轴的车削和深孔的内圆车削 (镗孔)
TURNING OF SLENDER SHAFTS AND INTERNAL TURNING (BORING) OF DEEP HOLES

在这两种情况下，在选择工况 (特别是切削工况和切削刃槽型) 时，都要考虑机床-刀具-工件系统发生自激或受迫振动的可能性。

振动对切削刃的磨损、加工表面质量以及工件的最终精度都有负面影响。

系统某个元件的刚度降低是自激振动产生的主要原因，在外圆车削中多数由细长的加工轴引起，在内圆车削中则通常是因为刀柄 (镗杆) 的刚度低。

细长度由轴长与直径的比率确定。

In both cases consider the possibility of self-excited or forced vibrations of the system machine-tool-workpiece when you choose the working conditions (especially cutting conditions and geometry of cutting edge).

Vibrations affect negatively the wear of cutting edge and the quality of machined surface and the final precision of workpiece as well.

The reduction of rigidity of one of elements is the primary cause of the self-excited vibrations, mostly it is due to slenderness of the machined shaft at external turning and lower rigidity of the tool holder (boring bar) at internal turning.

Degree of slenderness is defined as ratio of the length of shaft L and it´sdiameter

$$\lambda = \frac{L}{D}$$

λ 细长度 *degree of slenderness*
L 轴长 *lenght of shaft [mm]*
D 轴直径 *diameter of shaft [mm]*

多数情况下我们看到的轴的加工是带有多个不同直径和多个不同长度的阶梯轴，如图所示。

在这种情况下，需要用轴的平均直径来确定轴的细长度，这样细长度就会降低 (参见图 18)

Mostly we can see the machining of the shaft with more different diameters, stepped on different length, *see the picture.*

In this case we characterize the degree of slenderness by reduced slenderness which is defined by the median diameter of the shaft *(see the picture no. 18)*

图 18 / *Picture No.18*

$$D_s = \frac{D_1L_1 + D_2L_2 + \ldots D_nL_n}{L}$$

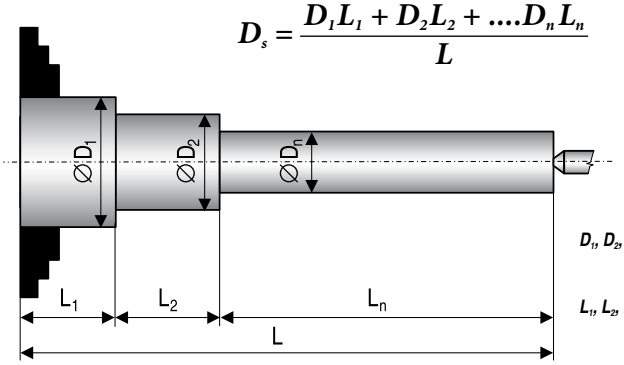

D_1, D_2, D_n	轴各台阶部分的直径 *Diameters of stepped parts of shaft*	*[mm]* *[mm]*
L_1, L_2, L_n	台阶部分的长度 *Length of stepped parts*	*[mm]* *[mm]*

降低的细长度 λ_{red} 由下面的比率确定

Reduced degree of slenderness λ_{red} is defined as ratio

$$\lambda_{red} = \frac{L}{D_s}$$

刀柄的刚度取决于它在内圆车削时的细长度

The rigidity of tool holder depends on its slenderness at internal turning

$$\lambda = \frac{L}{D}$$

L 是悬伸长度，D 是刀柄直径

L is length of overhand D is diameter of tool holder

PRAMET

切削力会导致切削时产生弹性变形 (挠度)。工件沿径向的变形和切削力的切向分力对振动的影响最大。

在变形达到特定极限时，便会引发自激振动。关于振动产生机理，技术文献中有许多论述振动的文章对此有更详细的阐述。

下面，将就如何避免产生振动给出一些具体建议。

在粗加工时，由于切屑横截面较大，作用的切削力较大 (径向和切向)，所以振动的可能性较高。

Cutting force causes elastic deformation (deflection) at turning. The deformation of workpiece in direction of radial and tangential component of cutting force is most important for raise of vibration.

The self excited vibration rise when the deformation reaches the specific limit. There are a lot of articles with the theme of vibration in technical literature which describe in more detailed way the mechanism of rise of vibration.

In next paragraph we show some of concrete recommendations how to avoid a raise of vibration.

The higher probability of vibration is at roughing where higher cutting forces act (radial and tangential) due to cut of bigger chip cross-section.

应该使用具有 (接近) 最大主偏角 $\kappa_r \approx 90°$ 的刀具，以减少产生振动的可能性。

You should use the tool with maximum setting angle (near) $\kappa_r \approx 90°$ to reduce probability of vibration.

在这种情况下，在实现切削深度 a_p 和进给量 f、最大切屑厚度 h 的同时，保持单位切削阻力以及切削力的径向分力 F_y (导致工件变形) 为最小值。切削力的进给分力 F_x 在 $\kappa_r \approx 90°$ 时达到最大 (沿工件的旋转轴线作用，对其变形的影响最小)。参见图19 a、b 示意图。例如在主偏角 $\kappa_r \approx 75°$ 时，F_y 值和 $\kappa_r = 90°$ 时相比增大两倍。

In this case you reach at cutting depth a_p and feed f the maximum chip thickness h, the specific cutting resistance reaches the minimum value and the radial component of cutting force F_y as well (which causes the deflection of workpiece). The feed component of cutting force F_x reaches the maximum value at $\kappa_r \approx 90°$ (acts in direction of axes of rotation of workpiece, has the minimum influence on its deflection). See the schema on *picture 19 a, b*. For instance at setting angle $\kappa_r \approx 75$ grows value of F_y two times compared with the value at $\kappa_r = 90°$.

图 19 / *Picture No.19*

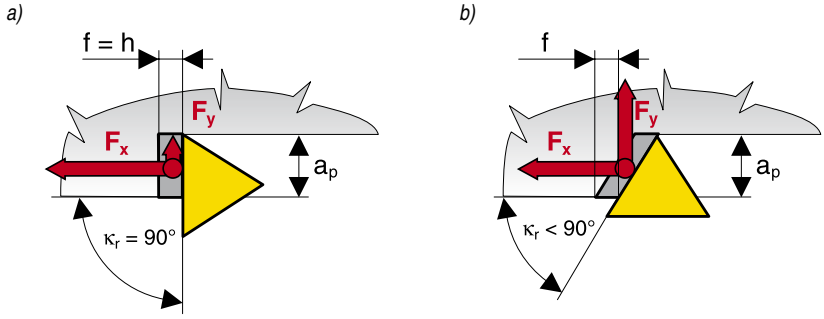

刀片刀尖 (圆角半径 r_ε) 上的作用力在主偏角 $\kappa_r = 90°$ 时对切削力的径向分力影响最大。

这是切削力中推离工件的消极分力。导致切削力 F_x 和 F_y 升高的分力参见图 20。在半径 r_ε、切削力在刀片刀尖上的作用分力 F_y 和工件的变形 (推离) 之间有一个直接的比例关系。

The forces acting on the corner of cutting insert (with corner radius r_ε) has the biggest influence on radial component of cutting force at setting angle $\kappa_r = 90°$.

This is a passive component of cutting force which pushes away the workpiece. Its components participate on raise of cutting forces F_x and F_y as you can see on the *picture 20*. There is a direct rule of proportion between radius r_ε, share of cutting forces acting on corner of cutting insert on component F_y and deflection (pushing away) of workpiece.

图 20 / *Picture No. 20*

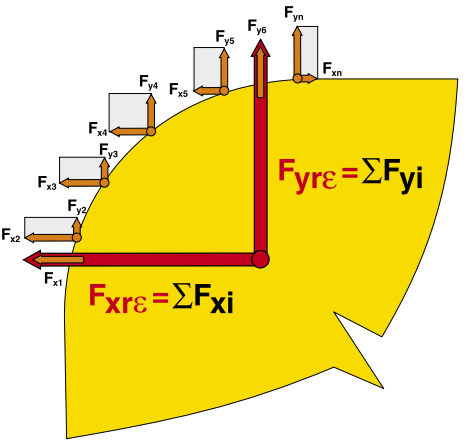

为了减少出现振动的可能性，需要选择具有最小圆角半径 r_ε 的刀片。

为了减少振动发生，需要使用具有最大前刀面和后刀面夹角 γ 的断屑槽 (降低 F_y)，并在可能的情况下使用珩磨切削刃 (切削刃工况 E) – 锋利的切削刃 (非 S – 倒角 + 珩磨)。

In order to reduce the probability of vibration is necessary to choose the smallest corner radius of cutting insert r_ε.

To reduce raise of vibration is necessary to use chip breaker with maximum rake face land angle γ (reduction of F_y) and if possible with honed cutting edge (cutting edge condition E) – sharp cutting edge (not S – chamfer + honing).

当所用刀具后刀面磨损异常或使用带涂层牌号时，发生振动的可能性增加 (涂层的较大厚度增加了切削刃的珩磨半径)。推荐使用带 PVD 涂层的牌号或带薄 MTCVD 涂层的牌号，如 6640 牌号)。

The probability of raise of vibration grows when tool with abnormal flank wear or coated grades are used (bigger thickness of coating layer increases the radius of honing of cutting edge). The application of PVD coated grades or grades with thin MTCVD coating is recommended for example grade 6640).

在车削内孔时使用最大直径的刀杆和最短的悬伸。

可以通过选择切削工况，特别是降低切削深度 a_p 来解决产生振动的问题。

Use the biggest diameter of boring bar and the shortest overhang at internal turning.

The problem of raise of vibration can be solved by the choice of cutting conditions, especially by the reduction of cutting depth a_p.

为了选择正确的切削工况，可以使用下表中的数值 (通过试验确定的数值)。这些数值适用于刀片 $\kappa_r \approx 90°$ 和刀尖圆角 r_ε = 0.8 mm 的刀具。

切削速度对振动的影响并不明显。我们可以改变切削力的频率，然后通过改变切削速度消除振动。所以既需要增加切削速度，也需要降低切削速度。

For choice of right cutting conditions you can use values in following table (experimentally determined values). The values are valid for the tool with cutting insert $\kappa_r \approx 90°$ and corner radius r_ε = 0,8 mm.

The influence of cutting speed on vibration is not evident. We can reach the change of frequency of cutting force and next to eliminate the vibration by the change of cutting speed. That is why is necessary both to increase and decrease the cutting speed.

PRAMET

图 21 / *Picture No.21*

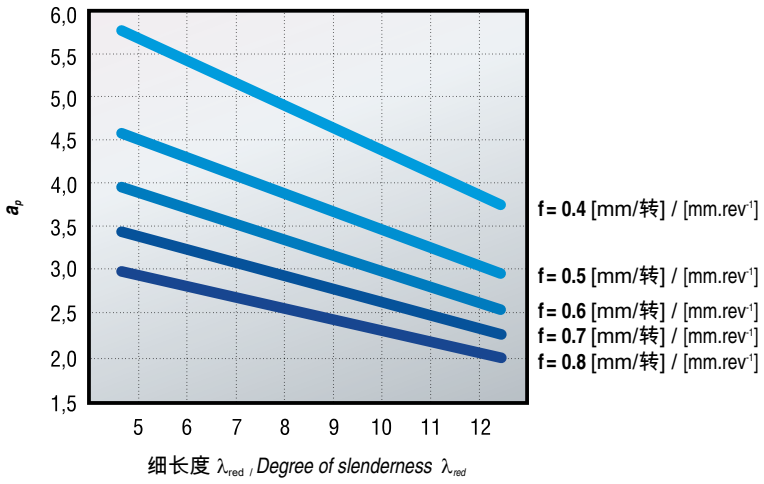

对于进给量也可以这样做。通过改变进给量，实现切削力值及其摆动频率的变动。所以我们建议增加和降低进给量。

车削非常细长的轴 λ_{red} >> 12 时，使用跟刀架 (移动中心架) 可以非常有效地消除振动。跟刀架跟随切削刃运动，并在切削点相对切削力的方向支撑工件。

尽管跟刀架非常有效，但也必须注意调节跟刀架与工件之间的压力。跟刀架不得使加工的轴变形。高压力可能会导致受迫振动。如果跟刀架部件为旋转件 (如减摩轴承)，则接触点必须具有最小的跳动量。

在使用非常细的刀具进行车削和镗孔时，使用带减振器的专用镗杆很有效果。

The same you can do with feed. The value of cutting force and shift of frequency of its oscillation is reached by the change of feed. So we recommend both increase and decrease it.

At turning of very slender shafts λ_{red} >> 12 is very effective to use follow rest (travelling stay) to eliminate the vibration. The follow rests follows the movement of cutting edge and support the workpiece in point of cut against the direction of cutting force.

The follow rests are very effective however you have to pay attention to adjustment of pressure between the rest and workpiece. The rest must not deform the machined shaft. The high pressure may cause forced vibrations. If the part of rest is rotating element (for example antifriction bearing) the touch point must have the minimum run out.

Effective is the usage of special boring bars with shock absorber for turning and boring by the very slender tool.

表 27
Table No. 27

推荐螺钉扭矩
RECOMMENDED SCREW TORQUES

螺钉的标识 Marking of screw	扭矩 Torque [Nm]*	扭矩手柄 Torque handle	接杆 Shank	规格 / Specification		
				螺丝刀 Screw driver	螺钉 / Screw	
					螺纹 Thread	长度 Length [mm]
US 2505-T07P	0.9	MR-0.9	D-T7P	SDR T07P	M2.5	5.2
US 2506-T07P	0.9	MR-0.9	D-T7P	SDR T07P	M2.5	6.3
US 3007-T09P	2.0	MR-2.0	D-T9P	SDR T09P	M3	7.5
US 3510-T15P	3.0	MR-3.0	D-T15P	SDR T15P	M3.5	10.4
US 3510A-T15P	3.0	MR-3.0	D-T15P	SDR T15P	M3.5	10.4
US 3512-T15P	3.0	MR-3.0	D-T15P	SDR T15P	M3.5	12.5
US 3512A-T15P	3.0	MR-3.0	D-T15P	SDR T15P	M3.5	12.5
US 4008-T15P	3.5	MR-3.5	D-T15P	SDR T15P	M4	7.8
US 4011-T15P	3.5	MR-3.5	D-T15P	SDR T15P	M4	10.5
US 4512-T15P	5.0	MR-5.0	D-T15P	SDR T15P	M4.5	12.0
US 4514A-T20	5.0	MR-5.0	D-T20	SDR T20	M4.5	14.0
US 5012-T15P	5.0	MR-5.0	D-T15P	SDR T15P	M5	12.0
US 45013-T20P	5.0	MR-5.0	D-T20P	SDR T20P	M5	13.0
US 46017-T20P	-	-	-	SDR T20P	M6	17.0
US 8020-T30P	-	-	-	SDR T20P	M8	20.0
SR 85011-T15P	5.0	MR-5.0	D-T15P	SDR T15P	M5	11.0
SR 85017-T09P	2.0	MR-2.0	D-T9P	SDR T09P	M5	17.0
SR 85020-T15P	4.0	-	-	SDR T09P	M5	20.0
SR 86025-T20P	6.5	-	-	SDR T20P	M6	25.0
HS0520C	6.0	-	-	HXK 4	M5	20.0
HS0616C	8.0	-	-	HXK 5	M6	16.0
HS0620C	8.0	-	-	HXK 5	M6	20.0
HS 0625C	8.0	-	-	HXK 5	M6	25.0
HS 0620	8.0	-	-	HXK 5	M6	20.0
HS 0625	8.0	-	-	HXK 5	M6	25.0

*) 要按表格中提及的扭矩订购扭矩手柄和接杆。
*) Torque handles and shanks are to be ordered with mentioned torques.

螺钉润滑	SCREW LUBRICATION
对于夹紧螺钉的高热应力，建议使用高品质润滑脂 MOLYKOTE 1000 进行润滑。可以像订购备件一样订购这种润滑脂。	With respect to a high thermal stress of clamping screws, it is recommended their lubrication by a high-quality paste MOLYKOTE 1000. This paste can be ordered by the same way as spare parts.

PRAMET

图 22 / *Picture No. 22*

计算器 / CALCULATOR

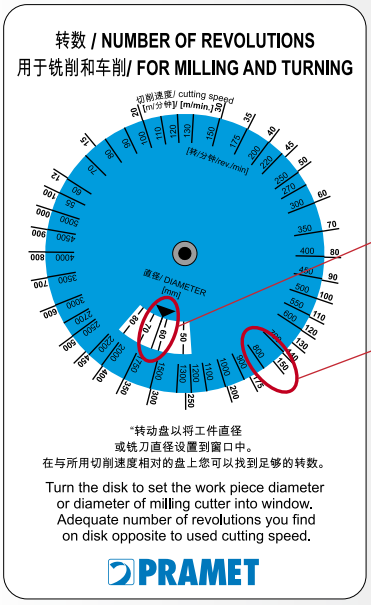

计算步骤 / CALCULATION PROCEDURE

示例 / Example

- 工件直径 ø 63 [mm] / workpiece diameter **ø 63 [mm]**
- 所用切削速度 - v_c = 160 [m/分钟] / used cutting speed
  - **v_c = 160 [m.min^{-1}]**

1) 在与箭头相对的窗口中，设定刀具或工件的直径 (63 mm)
   Set the diameter of cutter or workpiece (63 mm)
   at window opposite to arrow

2) 在切削速度的刻度盘上，找到所用的数值 (160 m/分钟)
   Find the used value (160 m.min^{-1}) on the scale of cutting speed

3) 在蓝盘的圆周上，找到适当的转速
   (~ 800 转/分钟)
   On circumference of blue disk find adequate revolutions
   (~ 800 rev.min-1)

图 23 / *Picture No. 23*

刀片盒上的印刷信息 / INFORMATION PRINTED ON INSERT BOXES

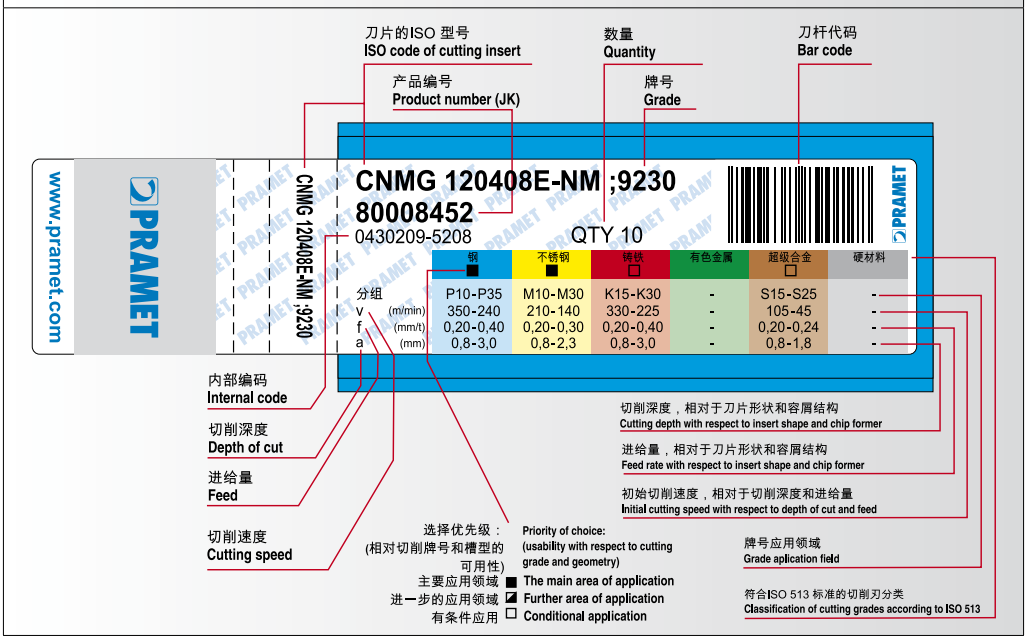

表 28
Table No. 28

硬度换算表
HARDNESS CONVERSION TABLE

强度 Strength [MPa]	硬度 / HARDNESS				强度 Strength [MPa]	硬度 / HARDNESS			
	布氏 BRINELL	维氏 VICKERS	洛氏 ROCKWELL	洛氏 ROCKWELL		布氏 BRINELL	维氏 VICKERS	洛氏 ROCKWELL	洛氏 ROCKWELL
Rm	HB	HV	HRB	HRC	Rm	HB	HV	HRB	HRC
285	86	90	-	-	**1190**	352	370	-	37,7
320	95	100	56,2	-	**1220**	361	380	-	38,8
350	105	110	62,3	-	**1255**	371	390	-	39,8
385	114	120	66,7	-	**1290**	380	400	-	40,8
415	124	130	71,2	-	**1320**	390	410	-	41,8
450	133	140	75	-	**1350**	399	420	-	42,7
480	143	150	78,7	-	**1385**	409	430	-	43,6
510	152	160	81,7	-	**1420**	418	440	-	44,5
545	162	170	85,8	-	**1455**	428	450	-	45,3
575	171	180	87,1	-	**1485**	437	460	-	46,1
610	181	190	89,5	-	**1520**	447	470	-	46,9
640	190	200	91,5	-	**1555**	456	480	-	47,7
675	199	210	93,5	-	**1595**	466	490	-	48,4
705	209	220	95	-	**1630**	475	500	-	49,1
740	219	230	96,7	-	**1665**	485	510	-	49,8
770	228	240	98,1	-	**1700**	494	520	-	50,5
800	238	250	99,5	-	**1740**	504	530	-	51,1
820	242	255	-	23,1	**1775**	513	540	-	51,7
850	252	265	-	24,8	**1810**	523	550	-	52,3
880	261	275	-	26,4	**1845**	532	560	-	53
900	266	280	-	27,1	**1880**	542	570	-	53,6
930	276	290	-	28,5	**1920**	551	580	-	54,1
950	280	295	-	29,2	**1955**	561	590	-	54,7
995	295	310	-	31	**1995**	570	600	-	55,2
1030	304	320	-	32,2	**2030**	580	610	-	55,7
1060	314	330	-	33,3	**2070**	589	620	-	56,3
1095	323	340	-	34,4	**2105**	599	630	-	56,8
1125	333	350	-	35,5	**2145**	608	640	-	57,3
1155	342	360	-	36,6	**2180**	618	650	-	57,8

PRAMET